CRAWFORD TRACEY CORPORATION

PRO-TECH 45SG ALUMINUM CURTAINWALL SYSTEM

L.M.I. & S.M.I. (MISSILE LEVEL "D" & "E")

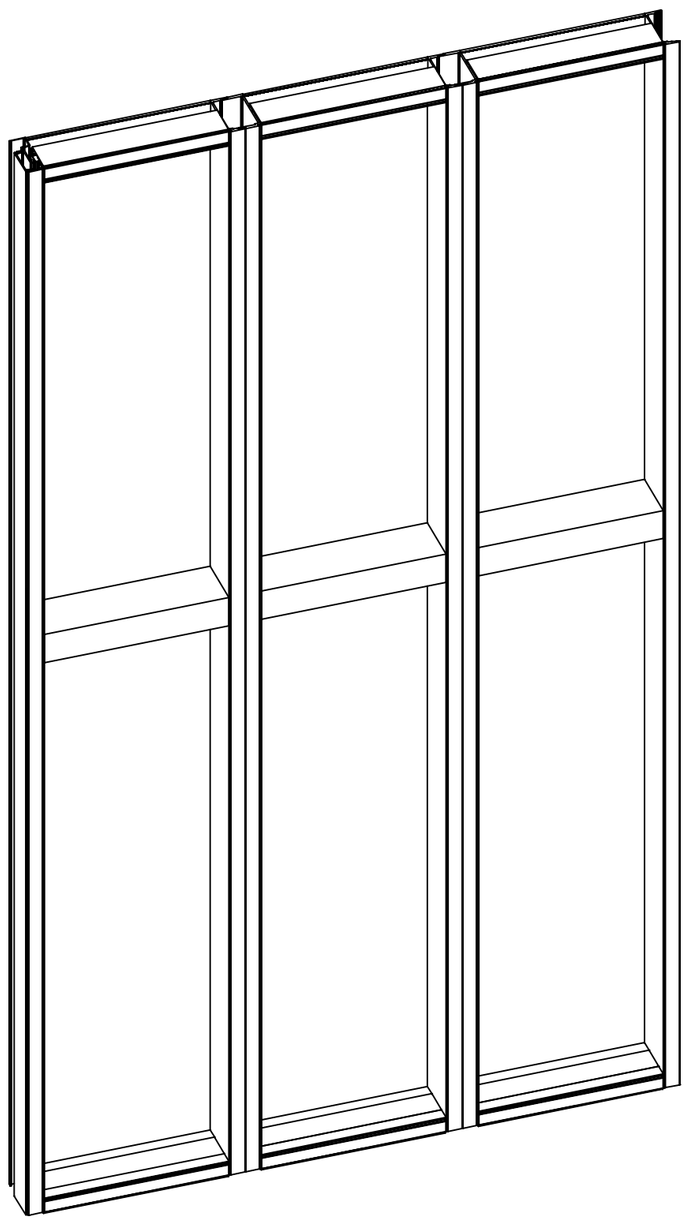

Digitally signed by Frank Bennardo
Date: 2021.09.01 11:32:50 -04'00'

FRANK BENNARDO, P.E.
PE# 0046549 CA 9885
09/01/2021

FL#29520.4

GENERAL NOTES:

1. THE SYSTEM AND GLASS TYPES DESCRIBED HEREIN COMPLY AND HAVE BEEN DESIGNED AND TESTED IN ACCORDANCE WITH THE FLORIDA BUILDING CODE SEVENTH EDITION (2020) PER
   a. ASTM E330-14, E331-00, E283-04, E1886-13a, E1996-14
   b. TAS 201 / 202 / 203
   c. AAMA 501
   d. ANSI Z97.1-2015 (400 ft-lb. IMPACT)
2. FOR USE WITHIN AND OUTSIDE THE HIGH VELOCITY HURRICANE ZONE (HVHZ).
3. DESIGN PRESSURES NOTED HEREIN ARE BASED ON MAXIMUM TESTED PRESSURES DIVIDED BY A 1.5 SAFETY FACTOR.
4. NO 33-1/3% INCREASE IN ALLOWABLE STRESS HAS BEEN USED IN THE DESIGN OF THIS SYSTEM. WIND LOAD DURATION FACTOR Cd=1.6 HAS BEEN USED FOR WOOD ANCHOR DESIGN.
5. THE ARCHITECT/ENGINEER OF RECORD FOR THE PROJECT SUPERSTRUCTURE WITH WHICH THIS DESIGN IS USED SHALL BE RESPONSIBLE FOR THE INTEGRITY OF ALL SUPPORTING SURFACES TO THIS DESIGN WHICH SHALL BE COORDINATED BY THE PERMITTING CONTRACTOR.WOOD BUCKS (BY OTHERS) SHALL BE ANCHORED PROPERLY TO TRANSFER LOADS TO THE EXISTING STRUCTURE.
6. THE SYSTEM DETAILED HEREIN IS GENERIC AND DOES NOT PROVIDE INFORMATION FOR A SPECIFIC SITE. FOR SITE CONDITIONS DIFFERENT FROM THE CONDITIONS DETAILED HEREIN, A LICENSED ENGINEER OR REGISTERED ARCHITECT SHALL PREPARE SITE SPECIFIC DOCUMENTS FOR USE IN CONJUNCTION WITH THIS DOCUMENT.
7. THE CONTRACTOR IS RESPONSIBLE TO INSULATE ALL MEMBERS FROM DISSIMILAR MATERIALS TO PREVENT ELECTROLYSIS.
8. FASTENERS SHALL BE CADMIUM-PLATED OR OTHERWISE CORROSION-RESISTANT MATERIAL AND SHALL COMPLY WITH "SPECIFICATIONS FOR ALUMINUM STRUCTURES" SECTION J.3.7.2 BY THE ALUMINUM ASSOCIATION, INC., & ANY APPLICABLE FEDERAL, STATE, AND/OR LOCAL CODES
9. ENGINEER SEAL AFFIXED HERE TO VALIDATES STRUCTURAL DESIGN AS SHOWN ONLY. USE OF THIS SPECIFICATION BY CONTRACTOR, et. al. INDEMNIFIES & SAVES HARMLESS THIS ENGINEER FOR ALL COST & DAMAGES INCLUDING LEGAL FEES & APPELLATE FEES RESULTING FROM MATERIAL FABRICATION, SYSTEM ERECTION, & CONSTRUCTION PRACTICES BEYOND THAT WHICH IS CALLED FOR BY LOCAL, STATE, & FEDERAL CODES & FROM DEVIATIONS OF THIS PLAN.
10. EXCEPT AS EXPRESSLY PROVIDED HEREIN, NO ADDITIONAL CERTIFICATIONS OR AFFIRMATIONS ARE INTENDED.
11. PRESSURE VALUES ON THIS APPROVAL ARE (ASD) ALLOWABLE DESIGN PRESSURES.
12. ALTERATIONS, ADDITIONS, OR OTHER MARKINGS TO THIS DOCUMENT ARE NOT PERMITTED AND INVALIDATE THIS CERTIFICATION.
13. SAFEGUARDS MUST BE OBSERVED (NOT IN THIS CERTIFICATION)
14. IF SLOPED GLAZING IS NEEDED, IT SHALL BE ALLOWED UNDER SITE SPECIFIC ENGINEERING. DESIGN MUST BE CHECKED AND APPROVED BY A PROFESSIONAL ENGINEER AND MANUFACTURER.
15. PRODUCT SHALL BE PERMANENTLY LABELED WITH A MINIMUM OF ONE LABEL PER SYSTEM CONTAINING THE FOLLOWING:
    CRAWFORD TRACEY CORPORATION
    3301 S.W. 13th DRIVE
    DEERFEILD BEACH, FLORIDA 33442
    APPROVED BY FLORIDA BUILDING COMMISSION
    FLORIDA PRODUCT APPROVAL NUMBER FL# 29520

SHEET INDEX

# SHEET	DESCRIPTION
01	COVER SHEET
02	ELEVATIONS
03-13	GLASS LOADING TABLES
14	MULLION LOADING TABLES
15-17	SIDE LOADED FRAME
18-23	DETAILS
24-30	ANCHOR LAYOUT & ANCHOR CAPACITY TABLES
31-33	EXTRUSIONS / PART LIST/ FRAME ASSEMBLY
33	TOTAL

VISIT ECALC.IO/32267

FOR HELPFUL RESOURCES, SITE SPECIFIC JOB ORDERING & MORE INFORMATION ABOUT THIS PRODUCT & RELATED SERVICES

SCAN HERE:

ENGINEERING EXPRESS®
POSTAL ADDRESS:
401 W. ATLANTIC AVE. R10 #219
DELRAY BEACH, FL 33444
ENGINEERINGEXPRESS.COM

CRAWFORD TRACEY CORPORATION
3301 S.W. 13th DRIVE
DEERFIELD BEACH, FL, 334422-8101
Phn. (954) 698-6888

PRO-TECH 45SG ALUMINUM CURTAINWALL SYSTEM
FLORIDA STATE APPROVAL

REMARKS	DRWN	CHKD	DATE
FBC 2020 UPDATE	JEM	AJP	10/19/20
-	-	-	-
-	-	-	-
-	-	-	-
-	-	-	-

COPYRIGHT ENGINEERING EXPRESS®

20-32267

SCALE: NTS UNLESS NOTED

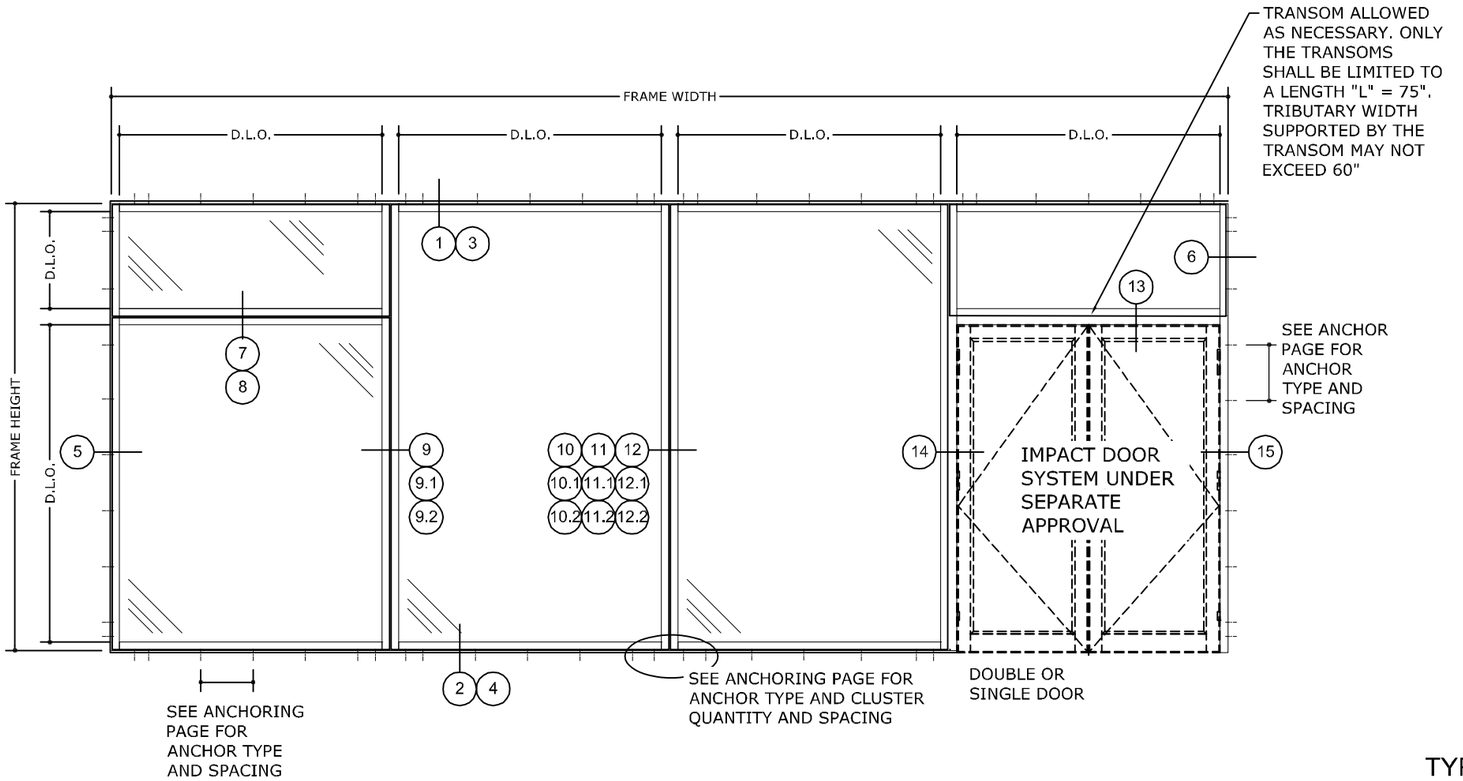

TYPICAL CURTAINWALL ELEVATION

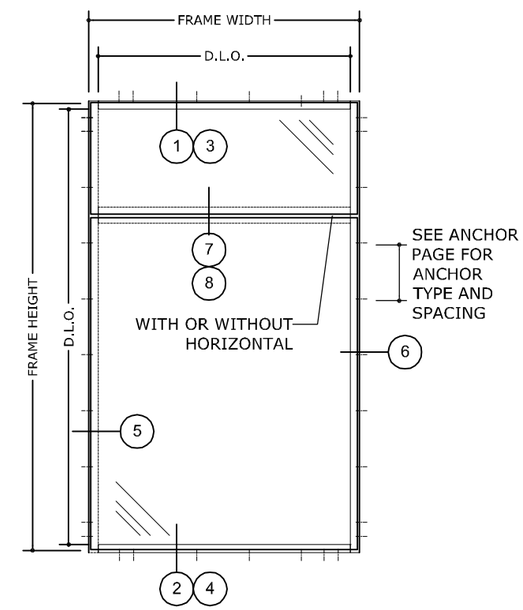

TYPICAL SINGLE PANEL OPENING

FRAME SIZE FOR SINGLE OPENINGS SHALL BE GOVERNED BY THE MAXIMUM ALLOWABLE D.L.O. DIMENSIONS DISPLAYED ON THE GLASS CHARTS

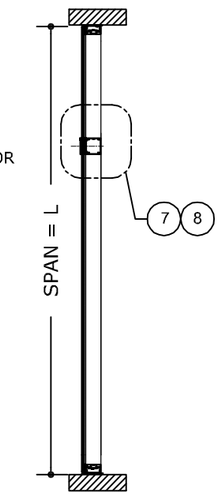

SECTION "A"

SINGLE SPAN

INTERMEDIATE HORIZONTAL NOTES:

1) 93" MAX. SPAN FOR INTERMEDIATE HORIZONTAL MEMBERS
2) SUNSHADES ARE ALLOWED UNDER SITE SPECIFIC ENGINEERING. FINAL SUNSHADE ATTACHMENT & DESIGN SHALL BE APPROVED BY THE PRODUCT MANUFACTURER AND A LICENSED PROFESSIONAL ENGINEER.

WATER INFILTRATION NOTE:

THIS SYSTEM HAS BEEN TESTED TO WITHSTAND UP TO A 100 PSF WATER LOAD

NOTES:
PRESSURES SHOWN ON PAGE 14 ARE APPLICABLE TO INTERMEDIATE VERTICAL MULLIONS RECEIVING DOORS, AS LONG AS THE MAXIMUM TRIBUTARY WIDTH, PER THE MULLION TYPE, IS NOT EXCEEDED.
IF ADDITIONAL TRANSOM ANCHORING IS NEEDED, IT SHALL BE DESIGNED PER SITE SPECIFIC ENGINEERING.

IF PANEL ABOVE TRANSOM EXCEEDS AN AREA 30 SQ. FT. OR A GLAZING DEADLOAD OF 300 lbs. THEN A STRUCTURAL BREAK SHALL BE REQUIRED TO SEPARATE DOOR & CURTAINWALL SYSTEM.

INSTRUCTIONS TO DETERMINE DESIGN PRESSURE RATING

STEP (1): USE THE GLASS LOADING TABLES TO DETERMINE THE ALLOWABLE PRESSURE OF THE GLASS.

STEP (2): USE THE MULLION LOADING TABLE TO DETERMINE THE ALLOWABLE PRESSURES FOR THE MULLIONS.

STEP (3): THE MINIMUM VALUE BETWEEN STEP (1) AND STEP (2) WILL DETERMINE THE DESIGN LOAD PRESSURE FOR THE CURTAIN WALL SYSTEM.

SLOPED SYSTEMS SHALL BE DESIGNED ON A SITE SPECIFIC BASIS WITH APPROVAL FROM LICENSED PROFESSIONAL ENGINEER, AND THE PRODUCT MANUFACTURER.

FRANK BENNARDO, P.E.
PE# 0046549 CA 9885
09/01/2021
FL#29520.4
ENGINEERING EXPRESS®
POSTAL ADDRESS:
401 W. ATLANTIC AVE. R10 #219
DELRAY BEACH, FL 33444
ENGINEERINGEXPRESS.COM

CRAWFORD TRACEY CORPORATION
3301 S.W. 13th DRIVE
DEERFIELD BEACH, FL, 334422-8101
Phn. (954) 698-6888

PRO-TECH 455G ALUMINUM CURTAINWALL SYSTEM
FLORIDA STATE APPROVAL

REMARKS	DRWN	CHKD	DATE
FBC 2020 UPDATE	JEM	AJP	10/19/20

COPYRIGHT ENGINEERING EXPRESS®

20-32267

SCALE: NTS UNLESS NOTED

GLASS TYPES (L.M.I.)

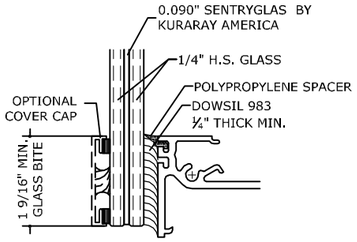

GLASS TYPE A
GLAZING DETAIL
N.T.S.
GLASS RATING:
LARGE MISSILE LEVEL D
9/16" GLASS

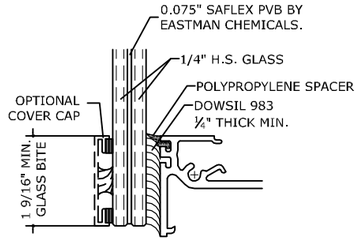

GLASS TYPE B
GLAZING DETAIL
N.T.S.
GLASS RATING:
LARGE MISSILE LEVEL D
9/16" GLASS

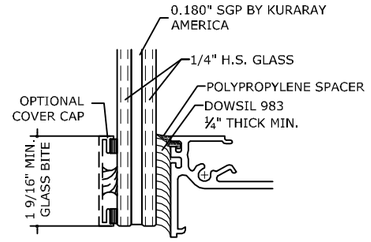

GLASS TYPE C
GLAZING DETAIL
N.T.S.
GLASS RATING:
LARGE MISSILE LEVEL E
9/16" GLASS

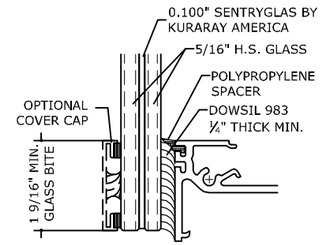

GLASS TYPE E
GLAZING DETAIL
N.T.S.
GLASS RATING:
LARGE MISSILE LEVEL D
9/16" GLASS

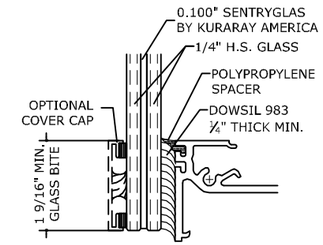

GLASS TYPE F
GLAZING DETAIL
N.T.S.
GLASS RATING:
LARGE MISSILE LEVEL D
9/16" GLASS

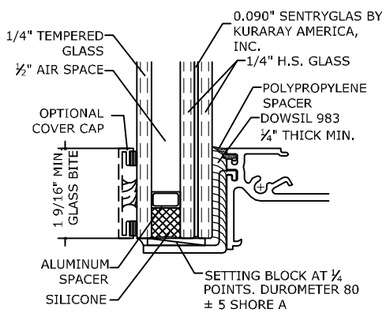

GLASS TYPE A1
GLAZING DETAIL
N.T.S.
GLASS RATING:
LARGE MISSILE LEVEL D
1 7/16" GLASS

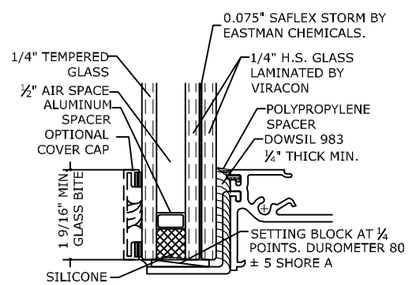

GLASS TYPE B1
GLAZING DETAIL
N.T.S.
GLASS RATING:
LARGE MISSILE LEVEL D
1 3/16" GLASS

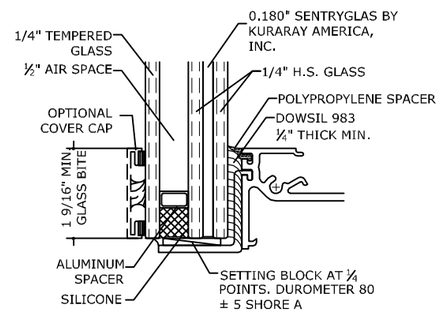

GLASS TYPE C1
GLAZING DETAIL
N.T.S.
GLASS RATING:
LARGE MISSILE LEVEL E
1 7/16" GLASS

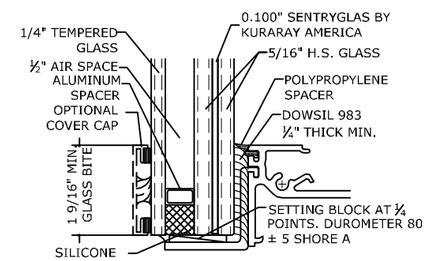

GLASS TYPE E1
GLAZING DETAIL
N.T.S.
GLASS RATING:
LARGE MISSILE LEVEL D
1 5/16" GLASS

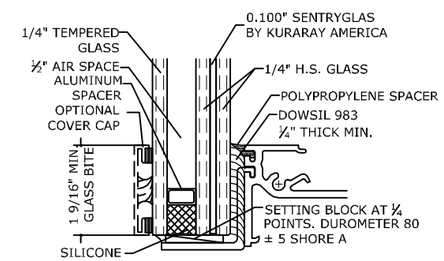

GLASS TYPE F1
GLAZING DETAIL
N.T.S.
GLASS RATING:
LARGE MISSILE LEVEL D
1 5/16" GLASS

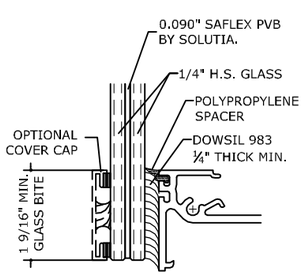

GLASS TYPE G
GLAZING DETAIL
N.T.S.
GLASS RATING:
LARGE MISSILE LEVEL D
9/16" GLASS

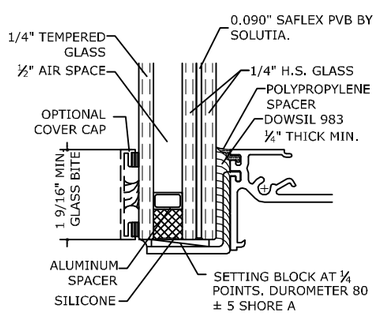

GLASS TYPE G1
GLAZING DETAIL
N.T.S.
GLASS RATING:
LARGE MISSILE LEVEL D
1 7/16" GLASS

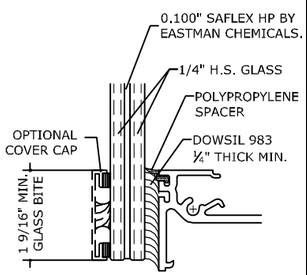

GLASS TYPE L
GLAZING DETAIL
N.T.S.
GLASS RATING:
LARGE MISSILE LEVEL D
9/16" GLASS

SLOPED SYSTEMS SHALL BE DESIGNED ON A SITE SPECIFIC BASIS WITH APPROVAL FROM LICENSED PROFESSIONAL ENGINEER, AND THE PRODUCT MANUFACTURER.

NOTE:
GLASS COMPLIES WITH ASTM E1300.

NOTES:

THICKER GLASS LITES MAY BE USED IN THE SAME CONFIGURATIONS AS SHOWN ABOVE , AS REQUIRED ON A SITE SPECIFIC BASIS. IF THICKER LITES ARE USED, IT SHALL BE CHECKED AND APPROVED BY A PROFESSIONAL ENGINEER .

CURVED OR BENT GLAZING MAY BE USED IN THE SAME CONFIGURATIONS AS SHOWN ABOVE , IN ACCORDANCE WITH SITE SPECIFIC REQUIREMENTS. IF CURVED OR BENT GLAZING IS USED, IT SHALL BE CHECKED AND APPROVED BY A PROFESSIONAL ENGINEER AND THE MANUFACTURER. FINAL APPROVAL SHALL BE GIVEN BY STATE AUTHORITY HAVING JURISDICTION.

NON-LAMINATED, MONOLITHIC GLASS MAY BE USED IN PLACE OF THE LAMINATED OPTIONS, SHOWN ON PAGE ABOVE, GIVEN THAT THE GLASS TO BE USED IS LABELED AS "NON-IMPACT RESISTANT" AND IS DESGINED TO MEET ASTM E-1300 STANDARDS. THE SUSBTITUTED GLAZING MUST BE CHECKED AND APPROVED BY A PROFESSIONAL ENGINEER AND THE MANUFACTURER

NOTES:

1. GLAZED GEOMETRICAL SHAPES MAY BE USED PROVIDED THEY FIT INSIDE THE APPROVED INSCRIBED SIZES.
2. GLAZING DETAILS WITH A SILICONE BITE OF 1 9/16'' ARE PERMITTED TO BE DECREASED TO A MINIMUM OF 1 3/8'' SILICONE BITE, PROVIDED THE ALLOWABLE PRESSURES SHOWN ON GLASS CHARTS ARE DECREASED BY 16%
3. OPTION OF .019'' CERAMIC FRIT ON ROOM SIDE SURFACE OF INNER PANE GLASS
4. GLASS MAY BE VERTICALLY OR HORIZONTALLY ORIENTED
5. OPTIONAL GLASS CAPS, FINS, OR SIMILAR ACCESORIES OF VARIOUS SIZES MAY BE ATTACHED WITH SILICONE, BASED ON SITE SPECIFIC CALCULATIONS
6. CONDITIONS WHERE THE GLASS EXTENDS PAST THE FRAME ARE ALLOWED AS LONG AS THE GLASS IS SUPPORTED BY A STRUCTURALLY SOUND SUBSTRATE. THIS CONDITION SHALL REQUIRE APPROVAL BY A PROFESSIONAL ENGINEER.
7. NON IMPACT GLASS TO BE DESIGNED ON A SITE SPECIFIC BASIS AND APPROVED BY A PROFESSIONAL ENGINEER.
8. GLASS PLIES NOT IN CONTACT WITH STRUCTURAL SILICONE MAYBE A GREATER THICKNESS THAN THOSE SHOWN, AND SHALL BE CHECKED AND APPROVED BY THE MANUFACTURER AND PROFESSIONAL ENGINEER ON A SITE SPECIFIC BASIS.

FRANK BENNARDO, P.E.
PE# 0046549 CA 9885
09/01/2021
FL#29520.4
ENGINEERING EXPRESS®
POSTAL ADDRESS:
401 W. ATLANTIC AVE. R10 #219
DELRAY BEACH, FL 33444
ENGINEERINGEXPRESS.COM

CRAWFORD TRACEY CORPORATION
3301 S.W. 13th DRIVE
DEERFIELD BEACH, FL, 334422-8101
Phn. (954) 698-6888

PRO-TECH 45SG ALUMINUM CURTAINWALL SYSTEM
FLORIDA STATE APPROVAL

REMARKS	DRWN	CHKD	DATE
FBC 2020 UPDATE	JEM	AJP	10/19/20

COPYRIGHT ENGINEERING EXPRESS®

20-32267

SCALE: NTS UNLESS NOTED

GLASS TYPE A, A1 & B, B1 - LOADING CHART (L.M.I.)

60 (in.)		
SIDE A OR B (D.L.O.) (in.)		
SIDE A OR B (D.L.O.) (in.)	*(+) P.S.F*	*(-) P.S.F*
36	100	100
42	100	100
48	100	100
54	100	100
60	100	100
66	100	100
72	100	100
78	75	75
84	75	75

72 (in.)		
SIDE A OR B (D.L.O.) (in.)		
SIDE A OR B (D.L.O.) (in.)	*(+) P.S.F*	*(-) P.S.F*
36	100	100
42	100	100
48	100	100
54	100	100
60	100	100
66	100	100
72	100	100
78	75	75
84	75	75

78 (in.)		
SIDE A OR B (D.L.O.) (in.)		
SIDE A OR B (D.L.O.) (in.)	*(+) P.S.F*	*(-) P.S.F*
36	100	100
42	100	100
48	100	100
54	100	100
60	100	100
66	100	100
72	100	100

84 (in.)		
SIDE A OR B (D.L.O.) (in.)		
SIDE A OR B (D.L.O.) (in.)	*(+) P.S.F*	*(-) P.S.F*
36	100	100
42	100	100
48	100	100
54	100	100
60	100	100

90.00 (in.)		
SIDE A OR B (D.L.O.) (in.)		
SIDE A OR B (D.L.O.) (in.)	*(+) P.S.F*	*(-) P.S.F*
36	100	100
42	100	100
48	100	100
54	100	100

96.00 (in.)		
SIDE A OR B (D.L.O.) (in.)		
SIDE A OR B (D.L.O.) (in.)	*(+) P.S.F*	*(-) P.S.F*
36	100	100
42	100	100
48	100	100
54	100	100

102 (in.)		
SIDE A OR B (D.L.O.) (in.)		
SIDE A OR B (D.L.O.) (in.)	*(+) P.S.F*	*(-) P.S.F*
36	100	100
42	100	100
48	100	100

108 (in.)		
SIDE A OR B (D.L.O.) (in.)		
SIDE A OR B (D.L.O.) (in.)	*(+) P.S.F*	*(-) P.S.F*
36	100	100
42	100	100
48	100	100

114 (in.)		
SIDE A OR B (D.L.O.) (in.)		
SIDE A OR B (D.L.O.) (in.)	*(+) P.S.F*	*(-) P.S.F*
36	100	100
42	100	100

120 (in.)		
SIDE A OR B (D.L.O.) (in.)		
SIDE A OR B (D.L.O.) (in.)	*(+) P.S.F*	*(-) P.S.F*
36	100	100
42	100	100

126 (in.)		
SIDE A OR B (D.L.O.) (in.)		
SIDE A OR B (D.L.O.) (in.)	*(+) P.S.F*	*(-) P.S.F*
36	100	100

132 (in.)		
SIDE A OR B (D.L.O.) (in.)		
SIDE A OR B (D.L.O.) (in.)	*(+) P.S.F*	*(-) P.S.F*
36	100	100

138 (in.)		
SIDE A OR B (D.L.O.) (in.)		
SIDE A OR B (D.L.O.) (in.)	*(+) P.S.F*	*(-) P.S.F*
36	100	100

144 (in.)		
SIDE A OR B (D.L.O.) (in.)		
SIDE A OR B (D.L.O.) (in.)	*(+) P.S.F*	*(-) P.S.F*
36	100	100

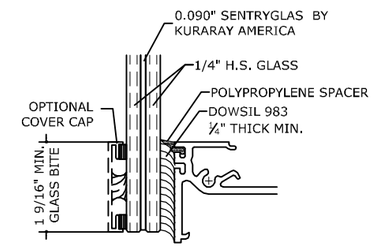

GLASS TYPE A
GLAZING DETAIL
N.T.S.
GLASS RATING:
LARGE MISSILE LEVEL D
9/16" GLASS

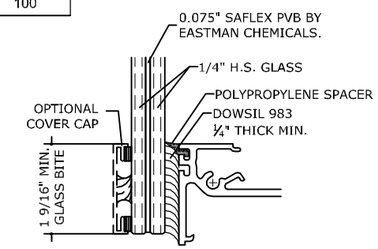

GLASS TYPE B
GLAZING DETAIL
N.T.S.
GLASS RATING:
LARGE MISSILE LEVEL D
5/16" GLASS

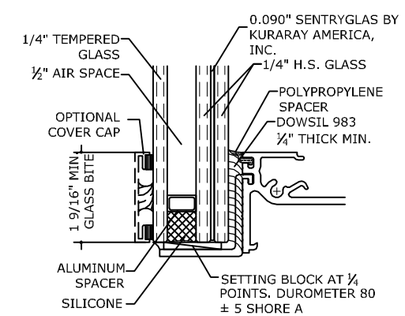

GLASS TYPE A1
GLAZING DETAIL
N.T.S.
GLASS RATING:
LARGE MISSILE LEVEL D
1 7/16" GLASS

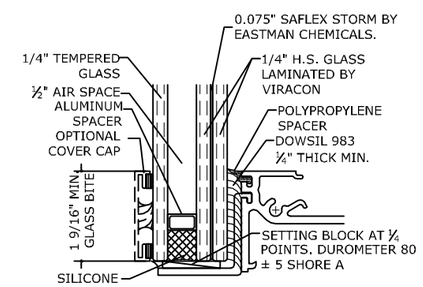

GLASS TYPE B1
GLAZING DETAIL
N.T.S.
GLASS RATING:
LARGE MISSILE LEVEL D
1 5/16" GLASS

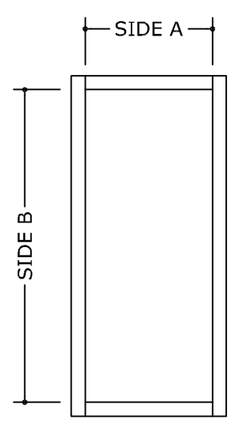

D.L.O. = DAYLIGHT OPENING

FRANK BENNARDO, P.E.
PE# 0046549 CA 9885
09/01/2021
FL#29520.4

ENGINEERING EXPRESS®
POSTAL ADDRESS:
401 W. ATLANTIC AVE. R10 #219
DELRAY BEACH, FL 33444
ENGINEERINGEXPRESS.COM

CRAWFORD TRACEY CORPORATION
3301 S.W. 13th DRIVE
DEERFIELD BEACH, FL, 334422-8101
Phn. (954) 698-6888

PRO-TECH 45SG ALUMINUM CURTAINWALL SYSTEM
FLORIDA STATE APPROVAL

REMARKS	DRWN	CHKD	DATE
FBC 2020 UPDATE	JEM	AJP	10/19/20

COPYRIGHT ENGINEERING EXPRESS®

20-32267

SCALE: NTS UNLESS NOTED

GLASS TYPE C & C1 - LOADING CHART (L.M.I.)

72 (in.)		
SIDE A OR B (D.L.O.) (in.)		
SIDE A OR B (D.L.O.) (in.)	*(+) P.S.F*	*(-) P.S.F*
36	100	100
42	100	100
48	100	100
54	100	100
60	95	95
66	86	86
72	79	79
78	69	69

84 (in.)		
SIDE A OR B (D.L.O.) (in.)		
SIDE A OR B (D.L.O.) (in.)	*(+) P.S.F*	*(-) P.S.F*
36	100	100
42	100	100
48	100	100
54	100	100
60	95	95
66	75	75

96 (in.)		
SIDE A OR B (D.L.O.) (in.)		
SIDE A OR B (D.L.O.) (in.)	*(+) P.S.F*	*(-) P.S.F*
36	100	100
42	100	100
48	100	100
54	92	92
60	83	83

108.00 (in.)		
SIDE A OR B (D.L.O.) (in.)		
SIDE A OR B (D.L.O.) (in.)	*(+) P.S.F*	*(-) P.S.F*
36	100	100
42	100	100
48	100	100
54	92	92

120 (in.)		
SIDE A OR B (D.L.O.) (in.)		
SIDE A OR B (D.L.O.) (in.)	*(+) P.S.F*	*(-) P.S.F*
36	100	100
42	100	100
48	100	100

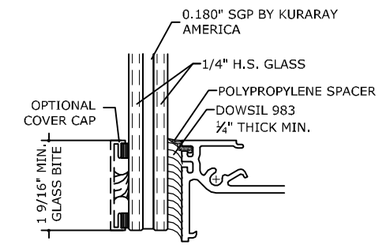

GLASS TYPE C

GLAZING DETAIL

N.T.S.

GLASS RATING:

LARGE MISSILE LEVEL E

5/16" GLASS

132 (in.)		
SIDE A OR B (D.L.O.) (in.)		
SIDE A OR B (D.L.O.) (in.)	*(+) P.S.F*	*(-) P.S.F*
36	100	100
42	100	100

144 (in.)		
SIDE A OR B (D.L.O.) (in.)		
SIDE A OR B (D.L.O.) (in.)	*(+) P.S.F*	*(-) P.S.F*
36	100	100

156 (in.)		
SIDE A OR B (D.L.O.) (in.)		
SIDE A OR B (D.L.O.) (in.)	*(+) P.S.F*	*(-) P.S.F*
36	100	100

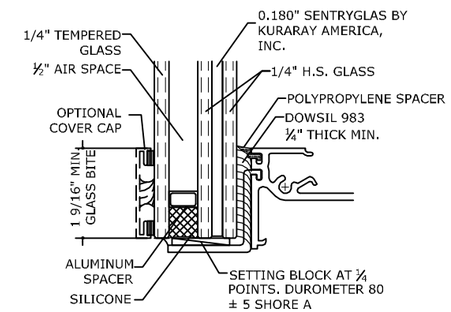

GLASS TYPE C1

GLAZING DETAIL

N.T.S.

GLASS RATING:

LARGE MISSILE LEVEL E

1 7/16" GLASS

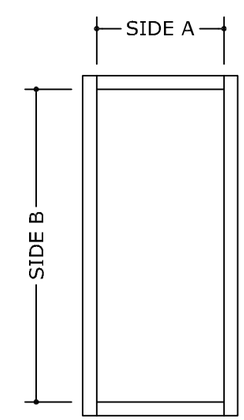

D.L.O. = DAYLIGHT OPENING

FRANK BENNARDO, P.E.
PE# 0046549 CA 9885
09/01/2021

FL#29520.4

ENGINEERING EXPRESS®
POSTAL ADDRESS:
401 W. ATLANTIC AVE. R10 #219
DELRAY BEACH, FL 33444
ENGINEERINGEXPRESS.COM

CRAWFORD TRACEY CORPORATION
3301 S.W. 13th DRIVE
DEERFIELD BEACH, FL, 334422-8101
Phn. (954) 698-6888

PRO-TECH 45SG ALUMINUM CURTAINWALL SYSTEM
FLORIDA STATE APPROVAL

REMARKS	DRWN	CHKD	DATE
FBC 2020 UPDATE	JEM	AJP	10/19/20
-	-	-	-
-	-	-	-
-	-	-	-
-	-	-	-

COPYRIGHT ENGINEERING EXPRESS®

20-32267

SCALE: NTS UNLESS NOTED

GLASS TYPE E, E1 & F, F1 - LOADING CHART (L.M.I.)

72 (in.)		
SIDE A OR B (D.L.O.) (in.)		
SIDE A OR B (D.L.O.) (in.)	*(+) P.S.F*	*(-) P.S.F*
36	120	126
42	120	126
48	120	126
54	120	126
60	120	126
66	111	117
72	102	107
78	102	107
84	102	107
90	102	107
96	102	107
102	102	107
108	102	107
114	102	107
120	102	107
126	102	107
132	102	107
138	102	107
144	102	107
150	102	107
156	102	107
162	102	107

84 (in.)		
SIDE A OR B (D.L.O.) (in.)		
SIDE A OR B (D.L.O.) (in.)	*(+) P.S.F*	*(-) P.S.F*
36	120	126
42	120	126
48	120	126
54	120	126
60	120	126
66	111	117
72	102	107
78	94	99
84	87	92
90	87	92
96	87	92
102	87	92
108	87	92
114	87	92
120	87	92
126	87	92
132	87	92
138	87	92

96 (in.)		
SIDE A OR B (D.L.O.) (in.)		
SIDE A OR B (D.L.O.) (in.)	*(+) P.S.F*	*(-) P.S.F*
36	120	126
42	120	126
48	120	126
54	120	126
60	120	126
66	111	117
72	102	107
78	94	99
84	87	92
90	82	86
96	76	80
102	76	80
108	76	80
114	76	80
120	76	80

108.00 (in.)		
SIDE A OR B (D.L.O.) (in.)		
SIDE A OR B (D.L.O.) (in.)	*(+) P.S.F*	*(-) P.S.F*
36	120	126
42	120	126
48	120	126
54	120	126
60	120	126
66	111	117
72	102	107
78	94	99
84	87	92
90	82	86
96	76	80
102	72	75
108	68	71

120 (in.)		
SIDE A OR B (D.L.O.) (in.)		
SIDE A OR B (D.L.O.) (in.)	*(+) P.S.F*	*(-) P.S.F*
36	120	126
42	120	126
48	120	126
54	120	126
60	120	126
66	111	117
72	102	107
78	94	99
84	87	92
90	82	86
96	76	80

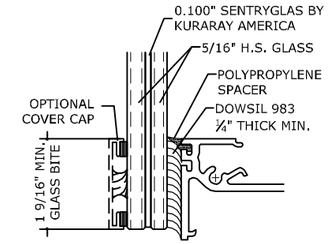

GLASS TYPE E
GLAZING DETAIL

GLASS RATING:
LARGE MISSILE LEVEL D
9/16" GLASS

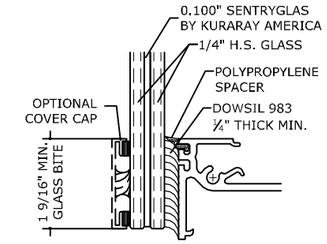

GLASS TYPE F
GLAZING DETAIL
N.T.S.

GLASS RATING:
LARGE MISSILE LEVEL D
9/16" GLASS

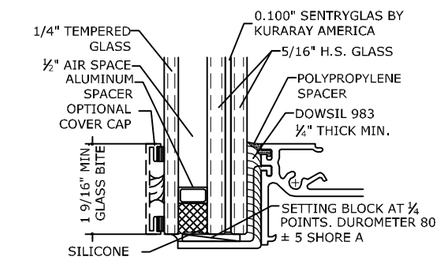

GLASS TYPE E1
GLAZING DETAIL
N.T.S.

GLASS RATING:
LARGE MISSILE LEVEL D
1 5/16" GLASS

132 (in.)		
SIDE A OR B (D.L.O.) (in.)		
WIDTH (in.)	*(+) P.S.F*	*(-) P.S.F*
36	120	126
42	120	126
48	120	126
54	120	126
60	120	126
66	111	117
72	102	107
78	94	99
84	87	92

144 (in.)		
SIDE A OR B (D.L.O.) (in.)		
WIDTH (in.)	*(+) P.S.F*	*(-) P.S.F*
36	120	126
42	120	126
48	120	126
54	120	126
60	120	126
66	111	117
72	102	107
78	94	99

156 (in.)		
SIDE A OR B (D.L.O.) (in.)		
WIDTH (in.)	*(+) P.S.F*	*(-) P.S.F*
36	120	126
42	120	126
48	120	126
54	120	126
60	120	126
66	111	117
72	102	107

168.00 (in.)		
SIDE A OR B (D.L.O.) (in.)		
SIDE A OR B (D.L.O.) (in.)	*(+) P.S.F*	*(-) P.S.F*
36	120	126
42	120	126
48	120	126
54	120	126
60	120	126
66	111	117

180 (in.)		
SIDE A OR B (D.L.O.) (in.)		
SIDE A OR B (D.L.O.) (in.)	*(+) P.S.F*	*(-) P.S.F*
36	120	126
42	120	126
48	120	126
54	120	126
60	120	126

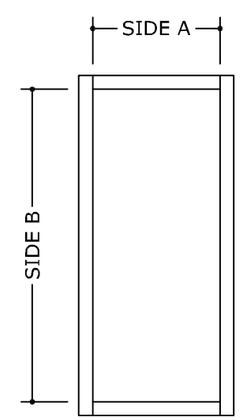

D.L.O. = DAYLIGHT OPENING

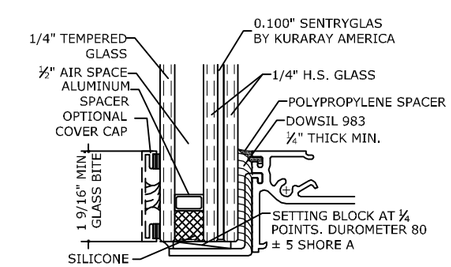

GLASS TYPE F1
GLAZING DETAIL
N.T.S.

GLASS RATING:
LARGE MISSILE LEVEL D
1 5/16" GLASS

192 (in.)		
SIDE A OR B (D.L.O.) (in.)		
WIDTH (in.)	*(+) P.S.F*	*(-) P.S.F*
36	120	126
42	120	126
48	120	126
54	120	126
60	120	126

198 (in.)		
SIDE A OR B (D.L.O.) (in.)		
WIDTH (in.)	*(+) P.S.F*	*(-) P.S.F*
36	120	126
42	120	126
48	120	126
54	120	126

204 (in.)		
SIDE A OR B (D.L.O.) (in.)		
WIDTH (in.)	*(+) P.S.F*	*(-) P.S.F*
36	120	126
42	120	126
48	120	126
54	120	126

FRANK BENNARDO, P.E.
PE# 0046549 CA 9885
09/01/2021
FL#29520.4
ENGINEERING EXPRESS®
POSTAL ADDRESS:
401 W. ATLANTIC AVE. R10 #219
DELRAY BEACH, FL 33444
ENGINEERINGEXPRESS.COM

CRAWFORD TRACEY CORPORATION
3301 S.W. 13th DRIVE
DEERFIELD BEACH, FL, 334422-8101
Phn. (954) 698-6888

PRO-TECH 455G ALUMINUM CURTAINWALL SYSTEM
FLORIDA STATE APPROVAL

REMARKS	DRWN	CHKD	DATE
FBC 2020 UPDATE	JEM	AJP	10/19/20

COPYRIGHT ENGINEERING EXPRESS®

20-32267

SCALE: NTS UNLESS NOTED

GLASS TYPE G & G1 - LOADING CHART (L.M.I.)

48 (in.)		
SIDE A OR B (D.L.O.) (in.)		
SIDE A OR B (D.L.O.) (in.)	*(+) P.S.F*	*(-) P.S.F*
36	80	80
42	80	80
48	80	80
54	80	80
60	80	80
66	80	80
72	80	80
78	80	80

60 (in.)		
SIDE A OR B (D.L.O.) (in.)		
SIDE A OR B (D.L.O.) (in.)	*(+) P.S.F*	*(-) P.S.F*
36	80	80
42	80	80
48	80	80
54	80	80
60	76	76

72 (in.)		
SIDE A OR B (D.L.O.) (in.)		
SIDE A OR B (D.L.O.) (in.)	*(+) P.S.F*	*(-) P.S.F*
36	80	80
42	80	80
48	80	80
54	80	80

84 (in.)		
SIDE A OR B (D.L.O.) (in.)		
SIDE A OR B (D.L.O.) (in.)	*(+) P.S.F*	*(-) P.S.F*
36	80	80
42	80	80

96.00 (in.)		
SIDE A OR B (D.L.O.) (in.)		
SIDE A OR B (D.L.O.) (in.)	*(+) P.S.F*	*(-) P.S.F*
36	80	80

108 (in.)		
SIDE A OR B (D.L.O.) (in.)		
SIDE A OR B (D.L.O.) (in.)	*(+) P.S.F*	*(-) P.S.F*
36	80	80

114 (in.)		
SIDE A OR B (D.L.O.) (in.)		
SIDE A OR B (D.L.O.) (in.)	*(+) P.S.F*	*(-) P.S.F*
24	80	80
30	80	80

120 (in.)		
SIDE A OR B (D.L.O.) (in.)		
SIDE A OR B (D.L.O.) (in.)	*(+) P.S.F*	*(-) P.S.F*
24	80	80
30	80	80

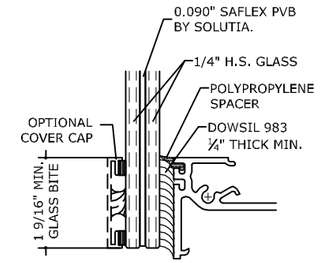

GLASS TYPE G

GLAZING DETAIL

N.T.S.

GLASS RATING:

LARGE MISSILE LEVEL D

9/16" GLASS

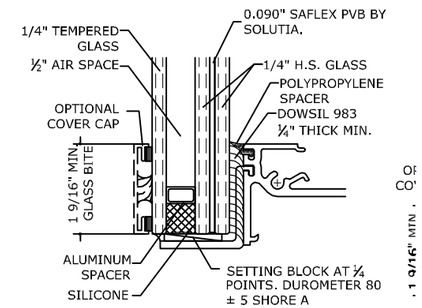

GLASS TYPE G1

GLAZING DETAIL

N.T.S.

GLASS RATING:

LARGE MISSILE LEVEL D

1 7/16" GLASS

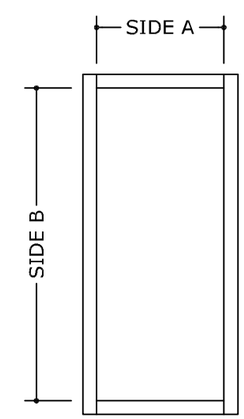

D.L.O. = DAYLIGHT OPENING

FRANK BENNARDO, P.E.
PE# 0046549 CA 9885

09/01/2021

FL#29520.4

ENGINEERING EXPRESS®
POSTAL ADDRESS:
401 W. ATLANTIC AVE. R10 #219
DELRAY BEACH, FL 33444
ENGINEERINGEXPRESS.COM

CRAWFORD TRACEY CORPORATION
3301 S.W. 13th DRIVE
DEERFIELD BEACH, FL, 334422-8101
Phn. (954) 698-6888

PRO-TECH 45SG ALUMINUM CURTAINWALL SYSTEM
FLORIDA STATE APPROVAL

REMARKS	DRWN	CHKD	DATE
FBC 2020 UPDATE	JEM	AJP	10/19/20

COPYRIGHT ENGINEERING EXPRESS®

20-32267

SCALE: NTS UNLESS NOTED

GLASS TYPE L - LOADING CHART (L.M.I.)

60 (in.)		
HEIGHT		
WIDTH (in.)	(+) P.S.F	(-) P.S.F
24	80	80
30	80	80
36	80	80
42	68	68
48	60	60
54	53	53
60	48	48
66	48	48

72 (in.)		
HEIGHT		
WIDTH (in.)	(+) P.S.F	(-) P.S.F
24	80	80
30	80	80
36	80	80
42	68	68
48	60	60
54	53	53

84 (in.)		
HEIGHT		
WIDTH (in.)	(+) P.S.F	(-) P.S.F
24	80	80
30	80	80
36	80	80
42	68	68
48	60	60

96 (in.)		
HEIGHT		
WIDTH (in.)	(+) P.S.F	(-) P.S.F
24	80	80
30	80	80
36	80	80
42	68	68

108 (in.)		
HEIGHT		
WIDTH (in.)	(+) P.S.F	(-) P.S.F
24	80	80
30	80	80
36	80	80

96 (in.)		
HEIGHT		
WIDTH (in.)	(+) P.S.F	(-) P.S.F
24	80	80
30	80	80

120 (in.)		
HEIGHT		
WIDTH (in.)	(+) P.S.F	(-) P.S.F
24	80	80
30	80	80

132 (in.)		
HEIGHT		
WIDTH (in.)	(+) P.S.F	(-) P.S.F
24	80	80
30	80	80

144 (in.)		
HEIGHT		
WIDTH (in.)	(+) P.S.F	(-) P.S.F
24	80	80

156 (in.)		
HEIGHT		
WIDTH (in.)	(+) P.S.F	(-) P.S.F
24	80	80

162 (in.)		
HEIGHT		
WIDTH (in.)	(+) P.S.F	(-) P.S.F
24	80	80

174 (in.)		
HEIGHT		
WIDTH (in.)	(+) P.S.F	(-) P.S.F
24	80	80

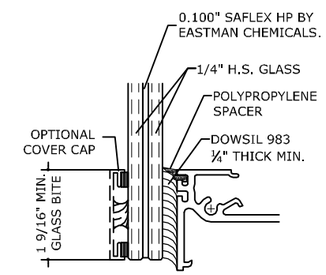

GLASS TYPE L

GLAZING DETAIL

N.T.S.

GLASS RATING:

LARGE MISSILE LEVEL D

9/16" GLASS

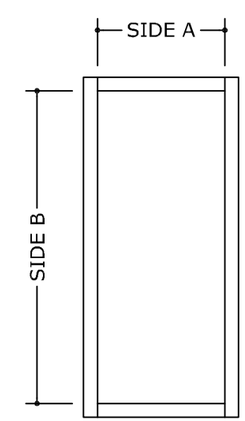

D.L.O. = DAYLIGHT OPENING

FRANK BENNARDO, P.E.
PE# 0046549 CA 9885
09/01/2021

FL#29520.4

ENGINEERING EXPRESS®
POSTAL ADDRESS:
401 W. ATLANTIC AVE. R10 #219
DELRAY BEACH, FL 33444
ENGINEERINGEXPRESS.COM

CRAWFORD TRACEY CORPORATION
3301 S.W. 13th DRIVE
DEERFIELD BEACH, FL, 334422-8101
Phn. (954) 698-6888

PRO-TECH 45SG ALUMINUM CURTAINWALL SYSTEM
FLORIDA STATE APPROVAL

REMARKS	DRWN	CHKD	DATE
FBC 2020 UPDATE	JEM	AJP	10/19/20
-	-	-	-
-	-	-	-
-	-	-	-
-	-	-	-

COPYRIGHT ENGINEERING EXPRESS®

20-32267

SCALE: NTS UNLESS NOTED

GLASS TYPES (S.M.I.)

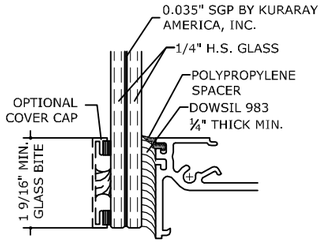

GLASS TYPE A
GLAZING DETAIL
N.T.S.
GLASS RATING:
SMALL MISSILE IMPACT
1 5/16" GLASS

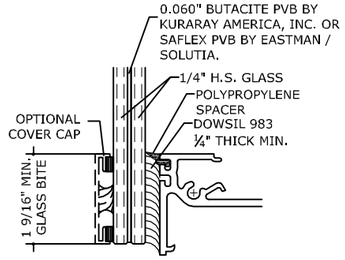

GLASS TYPE B
GLAZING DETAIL
N.T.S.
GLASS RATING:
SMALL MISSILE IMPACT
9/16" GLASS

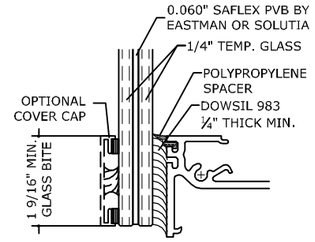

GLASS TYPE C
GLAZING DETAIL
N.T.S.
GLASS RATING:
SMALL MISSILE IMPACT
9/16" GLASS

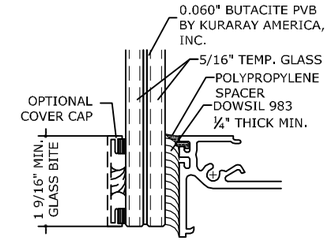

GLASS TYPE D
GLAZING DETAIL
N.T.S.
GLASS RATING:
SMALL MISSILE IMPACT
9/16" GLASS

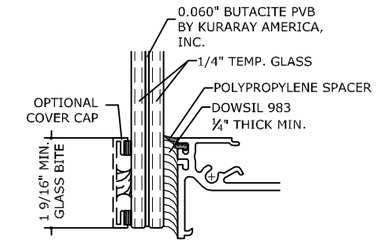

GLASS TYPE E
GLAZING DETAIL
N.T.S.
GLASS RATING:
SMALL MISSILE IMPACT
9/16" GLASS

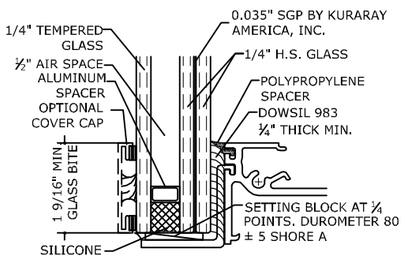

GLASS TYPE A1
GLAZING DETAIL
N.T.S.
GLASS RATING:
SMALL MISSILE IMPACT
1 5/16" GLASS

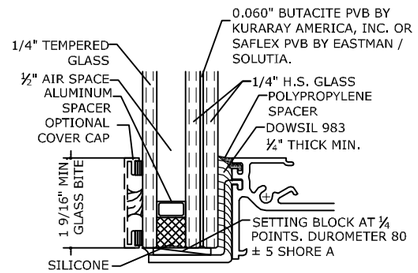

GLASS TYPE B1
GLAZING DETAIL
N.T.S.
GLASS RATING:
SMALL MISSILE IMPACT
1 5/16" GLASS

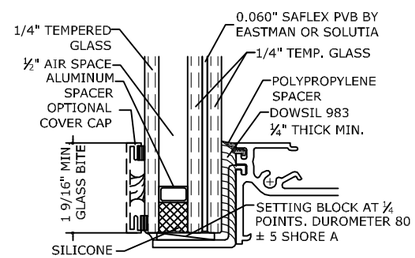

GLASS TYPE C1
GLAZING DETAIL
N.T.S.
GLASS RATING:
SMALL MISSILE IMPACT
1 5/16" GLASS

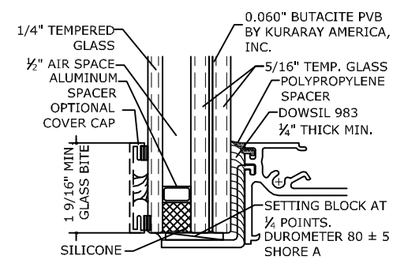

GLASS TYPE D1
GLAZING DETAIL
N.T.S.
GLASS RATING:
SMALL MISSILE IMPACT
1 5/16" GLASS

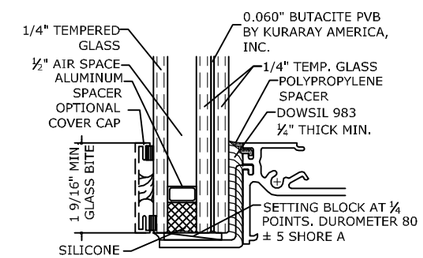

GLASS TYPE E1
GLAZING DETAIL
N.T.S.
GLASS RATING:
SMALL MISSILE IMPACT
1 5/16" GLASS

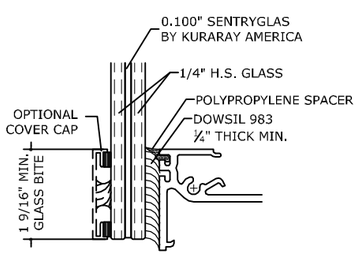

GLASS TYPE F
GLAZING DETAIL
N.T.S.
GLASS RATING:
SMALL MISSILE IMPACT
9/16" GLASS

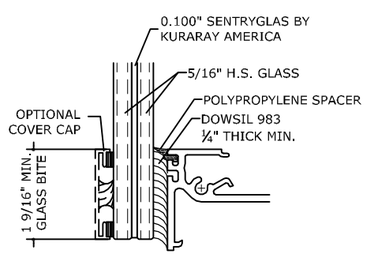

GLASS TYPE G
GLAZING DETAIL
GLASS RATING:
SMALL MISSILE IMPACT
9/16" GLASS

SLOPED SYSTEMS SHALL BE DESIGNED ON A SITE SPECIFIC BASIS WITH APPROVAL FROM LICENSED PROFESSIONAL ENGINEER, AND THE PRODUCT MANUFACTURER.

NOTE:
GLASS COMPLIES WITH ASTM E1300.

NOTES:

THICKER GLASS LITES MAY BE USED IN THE SAME CONFIGURATIONS AS SHOWN ABOVE , AS REQUIRED ON A SITE SPECIFIC BASIS. IF THICKER LITES ARE USED, IT SHALL BE CHECKED AND APPROVED BY A PROFESSIONAL ENGINEER .

CURVED OR BENT GLAZING MAY BE USED IN THE SAME CONFIGURATIONS AS SHOWN ABOVE , IN ACCORDANCE WITH SITE SPECIFIC REQUIREMENTS. IF CURVED OR BENT GLAZING IS USED, IT SHALL BE CHECKED AND APPROVED BY A PROFESSIONAL ENGINEER AND THE MANUFACTURER. FINAL APPROVAL SHALL BE GIVEN BY STATE AUTHORITY HAVING JURISDICTION.

NON-LAMINATED, MONOLITHIC GLASS MAY BE USED IN PLACE OF THE LAMINATED OPTIONS, SHOWN ON PAGE ABOVE, GIVEN THAT THE GLASS TO BE USED IS LABELED AS "NON-IMPACT RESISTANT" AND IS DESGINED TO MEET ASTM E-1300 STANDARDS. THE SUSBTITUTED GLAZING MUST BE CHECKED AND APPROVED BY A PROFESSIONAL ENGINEER AND THE MANUFACTURER

NOTES:

1. GLAZED GEOMETRICAL SHAPES MAY BE USED PROVIDED THEY FIT INSIDE THE APPROVED INSCRIBED SIZES.
2. GLAZING DETAILS WITH A SILICONE BITE OF 1 9/16'' ARE PERMITTED TO BE DECREASED TO A MINIMUM OF 1 3/8'' SILICONE BITE, PROVIDED THE ALLOWABLE PRESSURES SHOWN ON GLASS CHARTS ARE DECREASED BY 16%
3. OPTION OF .019'' CERAMIC FRIT ON ROOM SIDE SURFACE OF INNER PANE GLASS
4. GLASS MAY BE VERTICALLY OR HORIZONTALLY ORIENTED
5. OPTIONAL GLASS CAPS, FINS, OR SIMILAR ACCESORIES OF VARIOUS SIZES MAY BE ATTACHED WITH SILICONE, BASED ON SITE SPECIFIC CALCULATIONS
6. CONDITIONS WHERE THE GLASS EXTENDS PAST THE FRAME ARE ALLOWED AS LONG AS THE GLASS IS SUPPORTED BY A STRUCTURALLY SOUND SUBSTRATE. THIS CONDITION SHALL REQUIRE APPROVAL BY A PROFESSIONAL ENGINEER.
7. NON IMPACT GLASS TO BE DESIGNED ON A SITE SPECIFIC BASIS AND APPROVED BY A PROFESSIONAL ENGINEER.
8. GLASS PLIES NOT IN CONTACT WITH STRUCTURAL SILICONE MAYBE A GREATER THICKNESS THAN THOSE SHOWN, AND SHALL BE CHECKED AND APPROVED BY THE MANUFACTURER AND PROFESSIONAL ENGINEER ON A SITE SPECIFIC BASIS.

FRANK BENNARDO, P.E.
PE# 0046549 CA 9885
09/01/2021
FL#29520.4
ENGINEERING EXPRESS®
POSTAL ADDRESS:
401 W. ATLANTIC AVE. R10 #219
DELRAY BEACH, FL 33444
ENGINEERINGEXPRESS.COM
CRAWFORD TRACEY CORPORATION
3301 S.W. 13th DRIVE
DEERFIELD BEACH, FL, 334422-8101
Phn. (954) 698-6888

PRO-TECH 455G ALUMINUM CURTAINWALL SYSTEM
FLORIDA STATE APPROVAL

REMARKS	DRWN	CHKD	DATE
FBC 2020 UPDATE	JEM	AJP	10/19/20

COPYRIGHT ENGINEERING EXPRESS®

20-32267

SCALE: NTS UNLESS NOTED

GLASS TYPE A & A1 - LOADING CHART (S.M.I.)

60 (in.)		
SIDE A OR B (D.L.O.) (in.)		
SIDE A OR B (D.L.O.) (in.)	*(+) P.S.F*	*(-) P.S.F*
24	100	100
30	100	100
36	100	100
42	100	100
48	100	100
54	100	100
60	95	95
66	95	95
72	95	95
78	95	95
84	95	95

72 (in.)		
SIDE A OR B (D.L.O.) (in.)		
SIDE A OR B (D.L.O.) (in.)	*(+) P.S.F*	*(-) P.S.F*
24	100	100
30	100	100
36	100	100
42	100	100
48	100	100
54	100	100
60	95	95
66	86	86
72	79	79

84 (in.)		
SIDE A OR B (D.L.O.) (in.)		
SIDE A OR B (D.L.O.) (in.)	*(+) P.S.F*	*(-) P.S.F*
24	100	100
30	100	100
36	100	100
42	100	100
48	100	100
54	100	100
60	95	95

96 (in.)		
SIDE A OR B (D.L.O.) (in.)		
SIDE A OR B (D.L.O.) (in.)	*(+) P.S.F*	*(-) P.S.F*
24	100	100
30	100	100
36	100	100
42	100	100
48	100	100
54	100	100

108.00 (in.)		
SIDE A OR B (D.L.O.) (in.)		
SIDE A OR B (D.L.O.) (in.)	*(+) P.S.F*	*(-) P.S.F*
24	100	100
30	100	100
36	100	100
42	100	100
48	100	100

120 (in.)		
SIDE A OR B (D.L.O.) (in.)		
SIDE A OR B (D.L.O.) (in.)	*(+) P.S.F*	*(-) P.S.F*
24	100	100
30	100	100
36	100	100
42	100	100

132 (in.)		
SIDE A OR B (D.L.O.) (in.)		
WIDTH (in.)	*(+) P.S.F*	*(-) P.S.F*
24	100	100
30	100	100
36	100	100

144 (in.)		
SIDE A OR B (D.L.O.) (in.)		
WIDTH (in.)	*(+) P.S.F*	*(-) P.S.F*
24	100	100
30	100	100
36	100	100

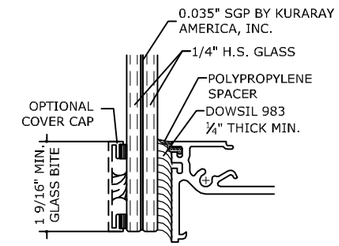

GLASS TYPE A

GLAZING DETAIL

N.T.S.

GLASS RATING:

SMALL MISSILE IMPACT

1 5/16" GLASS

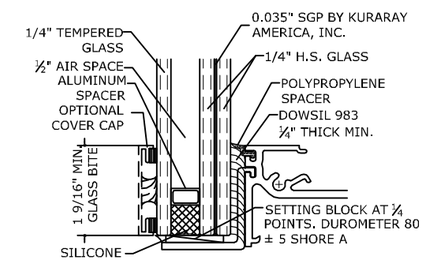

GLASS TYPE A1

GLAZING DETAIL

N.T.S.

GLASS RATING:

SMALL MISSILE IMPACT

1 5/16" GLASS

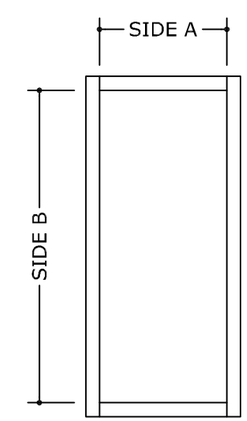

D.L.O. = DAYLIGHT OPENING

FRANK BENNARDO, P.E.
PE# 0046549 CA 9885
09/01/2021
FL#29520.4
ENGINEERING EXPRESS®
POSTAL ADDRESS:
401 W. ATLANTIC AVE. R10 #219
DELRAY BEACH, FL 33444
ENGINEERINGEXPRESS.COM

CRAWFORD TRACEY CORPORATION
3301 S.W. 13th DRIVE
DEERFIELD BEACH, FL, 334422-8101
Phn. (954) 698-6888

PRO-TECH 45SG ALUMINUM CURTAINWALL SYSTEM
FLORIDA STATE APPROVAL

REMARKS	DRWN	CHKD	DATE
FBC 2020 UPDATE	JEM	AJP	10/19/20

COPYRIGHT ENGINEERING EXPRESS®

20-32267

SCALE: NTS UNLESS NOTED

GLASS TYPE B, B1 & D, D1 - LOADING CHART (S.M.I.)

72 (in.)		
SIDE A OR B (D.L.O.) (in.)		
SIDE A OR B (D.L.O.) (in.)	*(+) P.S.F*	*(-) P.S.F*
36	120	132
42	120	132
48	120	132
54	120	132
60	120	132
66	111	123
72	102	112
78	102	112
84	102	112
90	102	112
96	102	112
102	102	112
108	102	112
114	102	112
120	102	112
126	102	112
132	102	112
138	102	112
144	102	112
150	102	112
156	102	112
162	102	112
168	102	112
174	102	112

84 (in.)		
SIDE A OR B (D.L.O.) (in.)		
SIDE A OR B (D.L.O.) (in.)	*(+) P.S.F*	*(-) P.S.F*
36	120	132
42	120	132
48	120	132
54	120	132
60	120	132
66	111	123
72	102	112
78	94	104
84	87	96
90	87	96
96	87	96
102	87	96
108	87	96
114	87	96
120	87	96
126	87	96
132	87	96
138	87	96
144	87	96
150	87	96
156	87	96
162	87	96
168	87	96

96 (in.)		
SIDE A OR B (D.L.O.) (in.)		
SIDE A OR B (D.L.O.) (in.)	*(+) P.S.F*	*(-) P.S.F*
36	120	132
42	120	132
48	120	132
54	120	132
60	120	132
66	111	123
72	102	112
78	94	104
84	87	96
90	82	90
96	76	84
102	76	84
108	76	84
114	76	84
120	76	84
126	76	84
132	76	84
138	76	84
144	76	84
150	76	84

108.00 (in.)		
SIDE A OR B (D.L.O.) (in.)		
SIDE A OR B (D.L.O.) (in.)	*(+) P.S.F*	*(-) P.S.F*
36	120	132
42	120	132
48	120	132
54	120	132
60	120	132
66	111	123
72	102	112
78	94	104
84	87	96
90	82	90
96	76	84
102	72	79
108	68	75
114	68	75
120	68	75
126	68	75
132	68	75

120 (in.)		
SIDE A OR B (D.L.O.) (in.)		
SIDE A OR B (D.L.O.) (in.)	*(+) P.S.F*	*(-) P.S.F*
36	120	132
42	120	132
48	120	132
54	120	132
60	120	132
66	111	123
72	102	112
78	94	104
84	87	96
90	82	90
96	76	84
102	72	79
108	68	75
114	64	71
120	61	67

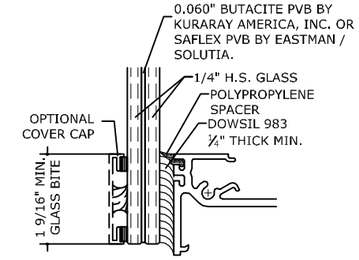

GLASS TYPE B
GLAZING DETAIL
N.T.S.
GLASS RATING:
SMALL MISSILE IMPACT
9/16" GLASS

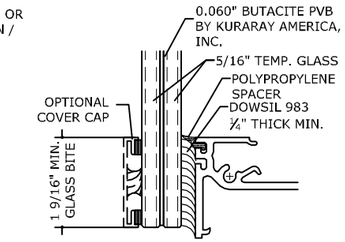

GLASS TYPE D
GLAZING DETAIL
N.T.S.
GLASS RATING:
SMALL MISSILE IMPACT
9/16" GLASS

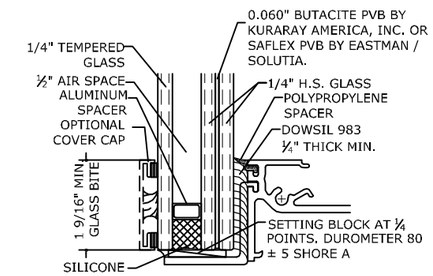

GLASS TYPE B1
GLAZING DETAIL
N.T.S.
GLASS RATING:
SMALL MISSILE IMPACT
1 5/16" GLASS

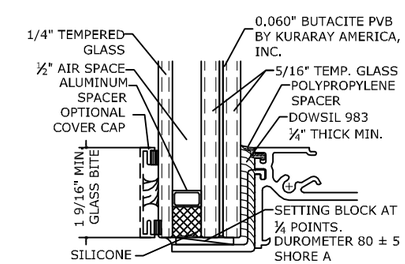

GLASS TYPE D1
GLAZING DETAIL
N.T.S.
GLASS RATING:
SMALL MISSILE IMPACT
1 5/16" GLASS

132 (in.)		
SIDE A OR B (D.L.O.) (in.)		
SIDE A OR B (D.L.O.) (in.)	*(+) P.S.F*	*(-) P.S.F*
36	120	132
42	120	132
48	120	132
54	120	132
60	120	132
66	111	123
72	102	112
78	94	104
84	87	96
90	82	90
96	76	84
102	72	79
108	68	75

144 (in.)		
SIDE A OR B (D.L.O.) (in.)		
SIDE A OR B (D.L.O.) (in.)	*(+) P.S.F*	*(-) P.S.F*
36	120	132
42	120	132
48	120	132
54	120	132
60	120	132
66	111	123
72	102	112
78	94	104
84	87	96
90	82	90
96	76	84

156 (in.)		
SIDE A OR B (D.L.O.) (in.)		
SIDE A OR B (D.L.O.) (in.)	*(+) P.S.F*	*(-) P.S.F*
36	120	132
42	120	132
48	120	132
54	120	132
60	120	132
66	111	123
72	102	112
78	94	104
84	87	96
90	82	90

168.00 (in.)		
SIDE A OR B (D.L.O.) (in.)		
SIDE A OR B (D.L.O.) (in.)	*(+) P.S.F*	*(-) P.S.F*
36	120	132
42	120	132
48	120	132
54	120	132
60	120	132
66	111	123
72	102	112
78	94	104
84	87	96

180 (in.)		
SIDE A OR B (D.L.O.) (in.)		
SIDE A OR B (D.L.O.) (in.)	*(+) P.S.F*	*(-) P.S.F*
36	120	132
42	120	132
48	120	132
54	120	132
60	120	132
66	111	123
72	102	112
78	94	104

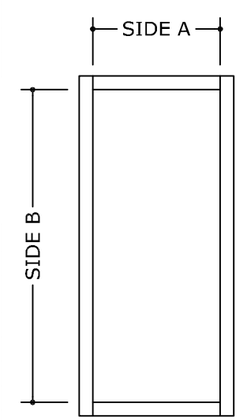

D.L.O. = DAYLIGHT OPENING

192 (in.)		
SIDE A OR B (D.L.O.) (in.)		
SIDE A OR B (D.L.O.) (in.)	*(+) P.S.F*	*(-) P.S.F*
36	120	132
42	120	132
48	120	132
54	120	132
60	120	132
66	111	123
72	102	112

204 (in.)		
SIDE A OR B (D.L.O.) (in.)		
SIDE A OR B (D.L.O.) (in.)	*(+) P.S.F*	*(-) P.S.F*
36	120	132
42	120	132
48	120	132
54	120	132
60	120	132
66	111	123

216 (in.)		
SIDE A OR B (D.L.O.) (in.)		
SIDE A OR B (D.L.O.) (in.)	*(+) P.S.F*	*(-) P.S.F*
36	120	132
42	120	132
48	120	132
54	120	132
60	120	132
66	111	123

228 (in.)		
SIDE A OR B (D.L.O.) (in.)		
SIDE A OR B (D.L.O.) (in.)	*(+) P.S.F*	*(-) P.S.F*
36	120	132
42	120	132
48	120	132
54	120	132
60	120	132

240 (in.)		
SIDE A OR B (D.L.O.) (in.)		
SIDE A OR B (D.L.O.) (in.)	*(+) P.S.F*	*(-) P.S.F*
36	120	132
42	120	132
48	120	132
54	120	132
60	120	132

FRANK BENNARDO, P.E.
PE# 0046549 CA 9885
09/01/2021
FL#29520.4
ENGINEERING EXPRESS®
POSTAL ADDRESS:
401 W. ATLANTIC AVE. R10 #219
DELRAY BEACH, FL 33444
ENGINEERINGEXPRESS.COM
CRAWFORD TRACEY CORPORATION
3301 S.W. 13th DRIVE
DEERFIELD BEACH, FL, 334422-8101
Phn. (954) 698-6888

PRO-TECH 455G ALUMINUM CURTAINWALL SYSTEM
FLORIDA STATE APPROVAL

REMARKS	DRWN	CHKD	DATE
FBC 2020 UPDATE	JEM	AJP	10/19/20

COPYRIGHT ENGINEERING EXPRESS®

20-32267

SCALE: NTS UNLESS NOTED

GLASS TYPE C, C1 & E, E1 - LOADING CHART (S.M.I.)

72 (in.)		
SIDE A OR B (D.L.O.) (in.)		
SIDE A OR B (D.L.O.) (in.)	(+) P.S.F	(-) P.S.F
36	120	126
42	120	126
48	120	126
54	120	126
60	120	126
66	111	117
72	102	107
78	102	107
84	102	107
90	102	107
96	102	107
102	102	107
108	102	107
114	102	107
120	102	107
126	102	107
132	102	107
138	102	107
144	102	107
150	102	107
156	102	107
162	102	107
168	102	107
174	102	107

84 (in.)		
SIDE A OR B (D.L.O.) (in.)		
SIDE A OR B (D.L.O.) (in.)	(+) P.S.F	(-) P.S.F
36	120	126
42	120	126
48	120	126
54	120	126
60	120	126
66	111	117
72	102	107
78	94	99
84	87	92
90	87	92
96	87	92
102	87	92
108	87	92
114	87	92
120	87	92
126	87	92
132	87	92
138	87	92
144	87	92
150	87	92
156	87	92
162	87	92
168	87	92

96 (in.)		
SIDE A OR B (D.L.O.) (in.)		
SIDE A OR B (D.L.O.) (in.)	(+) P.S.F	(-) P.S.F
36	120	126
42	120	126
48	120	126
54	120	126
60	120	126
66	111	117
72	102	107
78	94	99
84	87	92
90	82	86
96	76	80
102	76	80
108	76	80
114	76	80
120	76	80
126	76	80
132	76	80
138	76	80
144	76	80
150	76	80

108.00 (in.)		
SIDE A OR B (D.L.O.) (in.)		
SIDE A OR B (D.L.O.) (in.)	(+) P.S.F	(-) P.S.F
36	120	126
42	120	126
48	120	126
54	120	126
60	120	126
66	111	117
72	102	107
78	94	99
84	87	92
90	82	86
96	76	80
102	72	75
108	68	71
114	68	71
120	68	71
126	68	71
132	68	71

120 (in.)		
SIDE A OR B (D.L.O.) (in.)		
SIDE A OR B (D.L.O.) (in.)	(+) P.S.F	(-) P.S.F
36	120	126
42	120	126
48	120	126
54	120	126
60	120	126
66	111	117
72	102	107
78	94	99
84	87	92
90	82	86
96	76	80
102	72	75
108	68	71
114	64	67
120	61	64

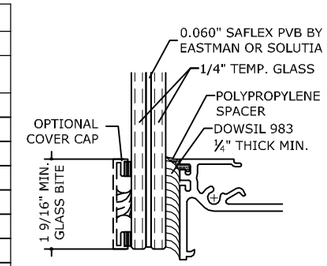

GLASS TYPE C
GLAZING DETAIL
N.T.S.
GLASS RATING:
SMALL MISSILE IMPACT
9/16" GLASS

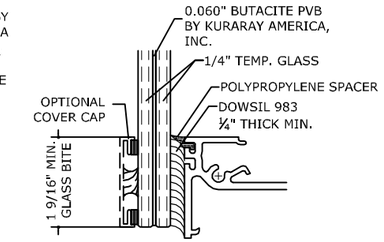

GLASS TYPE E
GLAZING DETAIL
N.T.S.
GLASS RATING:
SMALL MISSILE IMPACT
9/16" GLASS

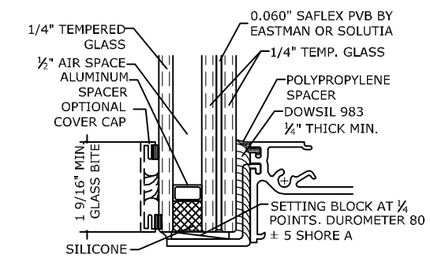

GLASS TYPE C1
GLAZING DETAIL
N.T.S.
GLASS RATING:
SMALL MISSILE IMPACT
1 5/16" GLASS

132 (in.)		
SIDE A OR B (D.L.O.) (in.)		
SIDE A OR B (D.L.O.) (in.)	(+) P.S.F	(-) P.S.F
36	120	126
42	120	126
48	120	126
54	120	126
60	120	126
66	111	117
72	102	107
78	94	99
84	87	92
90	82	86
96	76	80
102	72	75
108	68	71

144 (in.)		
SIDE A OR B (D.L.O.) (in.)		
SIDE A OR B (D.L.O.) (in.)	(+) P.S.F	(-) P.S.F
36	120	126
42	120	126
48	120	126
54	120	126
60	120	126
66	111	117
72	102	107
78	94	99
84	87	92
90	82	86
96	76	80

156 (in.)		
SIDE A OR B (D.L.O.) (in.)		
SIDE A OR B (D.L.O.) (in.)	(+) P.S.F	(-) P.S.F
36	120	126
42	120	126
48	120	126
54	120	126
60	120	126
66	111	117
72	102	107
78	94	99
84	87	92
90	82	86

168.00 (in.)		
SIDE A OR B (D.L.O.) (in.)		
SIDE A OR B (D.L.O.) (in.)	(+) P.S.F	(-) P.S.F
36	120	126
42	120	126
48	120	126
54	120	126
60	120	126
66	111	117
72	102	107
78	94	99
84	87	92

180 (in.)		
SIDE A OR B (D.L.O.) (in.)		
SIDE A OR B (D.L.O.) (in.)	(+) P.S.F	(-) P.S.F
36	120	126
42	120	126
48	120	126
54	120	126
60	120	126
66	111	117
72	102	107
78	94	99

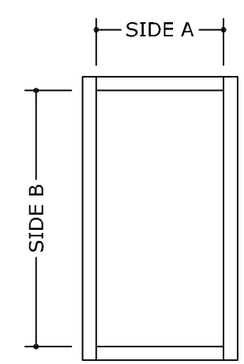

D.L.O. = DAYLIGHT OPENING

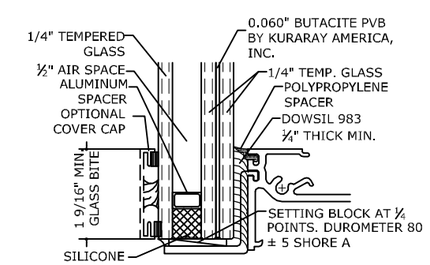

GLASS TYPE E1
GLAZING DETAIL
N.T.S.
GLASS RATING:
SMALL MISSILE IMPACT
1 5/16" GLASS

192 (in.)		
SIDE A OR B (D.L.O.) (in.)		
SIDE A OR B (D.L.O.) (in.)	(+) P.S.F	(-) P.S.F
36	120	126
42	120	126
48	120	126
54	120	126
60	120	126
66	111	117
72	102	107

204 (in.)		
SIDE A OR B (D.L.O.) (in.)		
SIDE A OR B (D.L.O.) (in.)	(+) P.S.F	(-) P.S.F
36	120	126
42	120	126
48	120	126
54	120	126
60	120	126
66	111	117

216 (in.)		
SIDE A OR B (D.L.O.) (in.)		
SIDE A OR B (D.L.O.) (in.)	(+) P.S.F	(-) P.S.F
36	120	126
42	120	126
48	120	126
54	120	126
60	120	126
66	111	117

228 (in.)		
SIDE A OR B (D.L.O.) (in.)		
SIDE A OR B (D.L.O.) (in.)	(+) P.S.F	(-) P.S.F
36	120	126
42	120	126
48	120	126
54	120	126
60	120	126

240 (in.)		
SIDE A OR B (D.L.O.) (in.)		
SIDE A OR B (D.L.O.) (in.)	(+) P.S.F	(-) P.S.F
36	120	126
42	120	126
48	120	126
54	120	126
60	120	126

FRANK BENNARDO, P.E.
PE# 0046549 CA 9885
09/01/2021
FL#29520.4
ENGINEERING EXPRESS®
POSTAL ADDRESS:
401 W. ATLANTIC AVE. R10 #219
DELRAY BEACH, FL 33444
ENGINEERINGEXPRESS.COM
CRAWFORD TRACEY CORPORATION
3301 S.W. 13th DRIVE
DEERFIELD BEACH, FL, 334422-8101
Phn. (954) 698-6888

PRO-TECH 45SG ALUMINUM CURTAINWALL SYSTEM
FLORIDA STATE APPROVAL

REMARKS	DRWN	CHKD	DATE
FBC 2020 UPDATE	JEM	AJP	10/19/20

COPYRIGHT ENGINEERING EXPRESS®

20-32267

SCALE: NTS UNLESS NOTED

GLASS TYPE F & G - LOADING CHART (S.M.I.)

72 (in.)		
SIDE A OR B (D.L.O.) (in.)		
SIDE A OR B (D.L.O.) (in.)	*(+) P.S.F*	*(-) P.S.F*
36	120	126
42	120	126
48	120	126
54	120	126
60	120	126
66	111	117
72	102	107
78	102	107
84	102	107
90	102	107
96	102	107
102	102	107
108	102	107
114	102	107
120	102	107
126	102	107
132	102	107
138	102	107
144	102	107
150	102	107
156	102	107
162	102	107

84 (in.)		
SIDE A OR B (D.L.O.) (in.)		
SIDE A OR B (D.L.O.) (in.)	*(+) P.S.F*	*(-) P.S.F*
36	120	126
42	120	126
48	120	126
54	120	126
60	120	126
66	111	117
72	102	107
78	94	99
84	87	92
90	87	92
96	87	92
102	87	92
108	87	92
114	87	92
120	87	92
126	87	92
132	87	92
138	87	92

96 (in.)		
SIDE A OR B (D.L.O.) (in.)		
SIDE A OR B (D.L.O.) (in.)	*(+) P.S.F*	*(-) P.S.F*
36	120	126
42	120	126
48	120	126
54	120	126
60	120	126
66	111	117
72	102	107
78	94	99
84	87	92
90	82	86
96	76	80
102	76	80
108	76	80
114	76	80
120	76	80

108.00 (in.)		
SIDE A OR B (D.L.O.) (in.)		
SIDE A OR B (D.L.O.) (in.)	*(+) P.S.F*	*(-) P.S.F*
36	120	126
42	120	126
48	120	126
54	120	126
60	120	126
66	111	117
72	102	107
78	94	99
84	87	92
90	82	86
96	76	80
102	72	75
108	68	71

120 (in.)		
SIDE A OR B (D.L.O.) (in.)		
SIDE A OR B (D.L.O.) (in.)	*(+) P.S.F*	*(-) P.S.F*
36	120	126
42	120	126
48	120	126
54	120	126
60	120	126
66	111	117
72	102	107
78	94	99
84	87	92
90	82	86
96	76	80

132 (in.)		
SIDE A OR B (D.L.O.) (in.)		
WIDTH (in.)	*(+) P.S.F*	*(-) P.S.F*
36	120	126
42	120	126
48	120	126
54	120	126
60	120	126
66	111	117
72	102	107
78	94	99
84	87	92

144 (in.)		
SIDE A OR B (D.L.O.) (in.)		
WIDTH (in.)	*(+) P.S.F*	*(-) P.S.F*
36	120	126
42	120	126
48	120	126
54	120	126
60	120	126
66	111	117
72	102	107
78	94	99

156 (in.)		
SIDE A OR B (D.L.O.) (in.)		
WIDTH (in.)	*(+) P.S.F*	*(-) P.S.F*
36	120	126
42	120	126
48	120	126
54	120	126
60	120	126
66	111	117
72	102	107

168.00 (in.)		
SIDE A OR B (D.L.O.) (in.)		
SIDE A OR B (D.L.O.) (in.)	*(+) P.S.F*	*(-) P.S.F*
36	120	126
42	120	126
48	120	126
54	120	126
60	120	126
66	111	117

180 (in.)		
SIDE A OR B (D.L.O.) (in.)		
SIDE A OR B (D.L.O.) (in.)	*(+) P.S.F*	*(-) P.S.F*
36	120	126
42	120	126
48	120	126
54	120	126
60	120	126

192 (in.)		
SIDE A OR B (D.L.O.) (in.)		
WIDTH (in.)	*(+) P.S.F*	*(-) P.S.F*
36	120	126
42	120	126
48	120	126
54	120	126
60	120	126

198 (in.)		
SIDE A OR B (D.L.O.) (in.)		
WIDTH (in.)	*(+) P.S.F*	*(-) P.S.F*
36	120	126
42	120	126
48	120	126
54	120	126

204 (in.)		
SIDE A OR B (D.L.O.) (in.)		
WIDTH (in.)	*(+) P.S.F*	*(-) P.S.F*
36	120	126
42	120	126
48	120	126
54	120	126

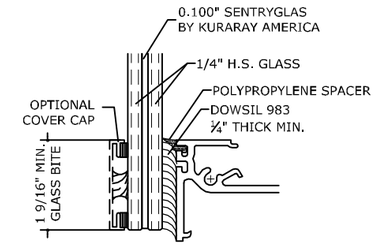

GLASS TYPE F

GLAZING DETAIL

N.T.S.

GLASS RATING:

SMALL MISSILE IMPACT

9/16" GLASS

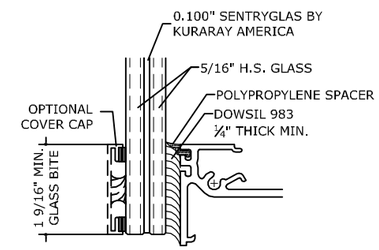

GLASS TYPE G

GLAZING DETAIL

GLASS RATING:

SMALL MISSILE IMPACT

9/16" GLASS

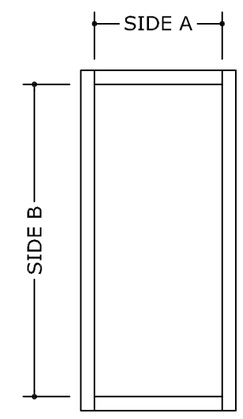

D.L.O. = DAYLIGHT OPENING

FRANK BENNARDO, P.E.
PE# 0046549 CA 9885
09/01/2021
FL#29520.4

ENGINEERING EXPRESS®
POSTAL ADDRESS:
401 W. ATLANTIC AVE. R10 #219
DELRAY BEACH, FL 33444
ENGINEERINGEXPRESS.COM

CRAWFORD TRACEY CORPORATION
3301 S.W. 13th DRIVE
DEERFIELD BEACH, FL, 334422-8101
Phn. (954) 698-6888

PRO-TECH 45SG ALUMINUM CURTAINWALL SYSTEM
FLORIDA STATE APPROVAL

REMARKS	DRWN	CHKD	DATE
FBC 2020 UPDATE	JEM	AJP	10/19/20
-	-	-	-
-	-	-	-
-	-	-	-
-	-	-	-

COPYRIGHT ENGINEERING EXPRESS®

20-32267

SCALE: NTS UNLESS NOTED

SINGLE SPAN MULLION LOADING TABLES (P.S.F.)

HEIGHT 72 (In.)						
WIDTH (In.)	(M1) NON-REINFORCED		(M2) LIGHT REINFORCED		(M3) HEAVY REINFORCED	
	(+) P.S.F	(-) P.S.F	(+) P.S.F	(-) P.S.F	(+) P.S.F	(-) P.S.F
24	100 *	100 *	100 *	100 *	100 *	100 *
30	100 *	100 *	100 *	100 *	100 *	100 *
36	100 *	100 *	100 *	100 *	100 *	100 *
42	100 *	100 *	100 *	100 *	100 *	100 *
48	100 *	100 *	100 *	100 *	100 *	100 *
54	100 *	100 *	100 *	100 *	100 *	100 *
60	100 *	100 *	100 *	100 *	100 *	100 *
66	100 *	100 *	100 *	100 *	100 *	100 *
72	100 *	100 *	100 *	100 *	100 *	100 *
75	100 *	100 *	100 *	100 *	100 *	100 *
78	100 *	100 *	100 *	100 *	100 *	100 *
81	100 *	100 *	100 *	100 *	100 *	100 *
84	100 *	100 *	100 *	100 *	100 *	100 *
87	100	100	100	100	100	100
90	100	100	100	100	100	100
93	100	100	100	100	100	100
96	100	100	100	100	100	100

HEIGHT 78 (In.)						
WIDTH (In.)	(M1) NON-REINFORCED		(M2) LIGHT REINFORCED		(M3) HEAVY REINFORCED	
	(+) P.S.F	(-) P.S.F	(+) P.S.F	(-) P.S.F	(+) P.S.F	(-) P.S.F
24	100 *	100 *	100 *	100 *	100 *	100 *
30	100 *	100 *	100 *	100 *	100 *	100 *
36	100 *	100 *	100 *	100 *	100 *	100 *
42	100 *	100 *	100 *	100 *	100 *	100 *
48	100 *	100 *	100 *	100 *	100 *	100 *
54	100 *	100 *	100 *	100 *	100 *	100 *
60	100 *	100 *	100 *	100 *	100 *	100 *
66	100 *	100 *	100 *	100 *	100 *	100 *
72	100 *	100 *	100 *	100 *	100 *	100 *
75	100 *	100 *	100 *	100 *	100 *	100 *
78	100 *	100 *	100 *	100 *	100 *	100 *
81	100	100	100	100	100	100
84	100	100	100	100	100	100
87	100	100	100	100	100	100
90	100	100	100	100	100	100
93	100	100	100	100	100	100
96	100	100	100	100	100	100

HEIGHT 84 (In.)						
WIDTH (In.)	(M1) NON-REINFORCED		(M2) LIGHT REINFORCED		(M3) HEAVY REINFORCED	
	(+) P.S.F	(-) P.S.F	(+) P.S.F	(-) P.S.F	(+) P.S.F	(-) P.S.F
24	100 *	100 *	100 *	100 *	100 *	100 *
30	100 *	100 *	100 *	100 *	100 *	100 *
36	100 *	100 *	100 *	100 *	100 *	100 *
42	100 *	100 *	100 *	100 *	100 *	100 *
48	100 *	100 *	100 *	100 *	100 *	100 *
54	95 *	95 *	100 *	100 *	100 *	100 *
60	89 *	89 *	100 *	100 *	100 *	100 *
66	85 *	85 *	100 *	100 *	100 *	100 *
72	82 *	82 *	100 *	100 *	100 *	100 *
75	81 *	81 *	100	100	100	100
78	80 *	80 *	100	100	100	100
81	80 *	80 *	100	100	100	100
84	80 *	80 *	100	100	100	100
87	80	80	100	100	100	100
90	80	80	100	100	100	100
93	80	80	100	100	100	100
96	80	80	100	100	100	100

HEIGHT 90 (In.)						
WIDTH (In.)	(M1) NON-REINFORCED		(M2) LIGHT REINFORCED		(M3) HEAVY REINFORCED	
	(+) P.S.F	(-) P.S.F	(+) P.S.F	(-) P.S.F	(+) P.S.F	(-) P.S.F
24	100 *	100 *	100 *	100 *	100 *	100 *
30	100 *	100 *	100 *	100 *	100 *	100 *
36	100 *	100 *	100 *	100 *	100 *	100 *
42	91 *	91 *	100 *	100 *	100 *	100 *
48	82 *	82 *	100 *	100 *	100 *	100 *
54	75 *	75 *	100 *	100 *	100 *	100 *
60	71 *	71 *	100 *	100 *	100 *	100 *
66	66 *	66 *	100 *	100 *	100 *	100 *
72	64 *	64 *	100 *	100 *	100 *	100 *
75	63 *	63 *	100	100	100	100
78	62 *	62 *	100	100	100	100
81	61 *	61 *	99	99	100	100
84	61 *	61 *	99	99	100	100
87	60 *	60 *	98	98	100	100
90	60 *	60 *	98	98	100	100
93	60 *	60 *	98	98	100	100
96	60	60	98	98	100	100

HEIGHT 96 (In.)						
WIDTH (In.)	(M1) NON-REINFORCED		(M2) LIGHT REINFORCED		(M3) HEAVY REINFORCED	
	(+) P.S.F	(-) P.S.F	(+) P.S.F	(-) P.S.F	(+) P.S.F	(-) P.S.F
24	100 *	100 *	100 *	100 *	100 *	100 *
30	100 *	100 *	100 *	100 *	100 *	100 *
36	85 *	85 *	100 *	100 *	100 *	100 *
42	75 *	75 *	100 *	100 *	100 *	100 *
48	67 *	67 *	94 *	94 *	100 *	100 *
54	61 *	61 *	86 *	86 *	100 *	100 *
60	56 *	56 *	80 *	80 *	100 *	100 *
66	53 *	53 *	86 *	86 *	100 *	100 *
72	50 *	50 *	82 *	82 *	100 *	100 *
75	49 *	49 *	81 *	81 *	100	100
78	49 *	49 *	79 *	79 *	100	100
81	48 *	48 *	78 *	78 *	100	100
84	47 *	47 *	77 *	77 *	100	100
87	47 *	47 *	77	77	100	100
90	47 *	47 *	77	77	100	100
93	47 *	47 *	76	76	100	100
96	47	47	76	76	100	100

HEIGHT 102 (In.)						
WIDTH (In.)	(M1) NON-REINFORCED		(M2) LIGHT REINFORCED		(M3) HEAVY REINFORCED	
	(+) P.S.F	(-) P.S.F	(+) P.S.F	(-) P.S.F	(+) P.S.F	(-) P.S.F
24	100 *	100 *	100 *	100 *	100 *	100 *
30	83 *	83 *	100 *	100 *	100 *	100 *
36	70 *	70 *	100 *	100 *	100 *	100 *
42	62 *	62 *	92 *	92 *	100 *	100 *
48	55 *	55 *	82 *	82 *	100 *	100 *
54	50 *	50 *	75 *	75 *	100 *	100 *
60	46 *	46 *	75 *	75 *	100 *	100 *
66	43 *	43 *	70 *	70 *	100 *	100 *
72	41 *	41 *	66 *	66 *	96 *	96 *
75	40 *	40 *	65 *	65 *	95	95
78	39 *	39 *	64 *	64 *	93	93
81	38 *	38 *	63 *	63 *	92	92
84	38 *	38 *	62 *	62 *	91	91
87	37 *	37 *	61 *	61 *	90	90
90	37 *	37 *	61 *	61 *	89	89
93	37 *	37 *	60	60	89	89
96	37	37	60	60	88	88

HEIGHT 108 (In.)						
WIDTH (In.)	(M1) NON-REINFORCED		(M2) LIGHT REINFORCED		(M3) HEAVY REINFORCED	
	(+) P.S.F	(-) P.S.F	(+) P.S.F	(-) P.S.F	(+) P.S.F	(-) P.S.F
24	86 *	86 *	100 *	100 *	100 *	100 *
30	70 *	70 *	100 *	100 *	100 *	100 *
36	60 *	60 *	94 *	94 *	100 *	100 *
42	52 *	52 *	82 *	82 *	100 *	100 *
48	46 *	46 *	73 *	73 *	100 *	100 *
54	41 *	41 *	67 *	67 *	100 *	100 *
60	38 *	38 *	62 *	62 *	93 *	93 *
66	35 *	35 *	58 *	58 *	87 *	87 *
72	33 *	33 *	55 *	55 *	82 *	82 *
75	33 *	33 *	53 *	53 *	80 *	80 *
78	32 *	32 *	52 *	52 *	79 *	79 *
81	31 *	31 *	51 *	51 *	77	77
84	31 *	31 *	50 *	50 *	76	76
87	30 *	30 *	49 *	49 *	75	75
90	30 *	30 *	49 *	49 *	74	74
93	30 *	30 *	48 *	48 *	73	73
96	29	29	48	48	72	72

HEIGHT 114 (In.)						
WIDTH (In.)	(M1) NON-REINFORCED		(M2) LIGHT REINFORCED		(M3) HEAVY REINFORCED	
	(+) P.S.F	(-) P.S.F	(+) P.S.F	(-) P.S.F	(+) P.S.F	(-) P.S.F
24	73 *	73 *	100 *	100 *	100 *	100 *
30	59 *	59 *	94 *	94 *	100 *	100 *
36	50 *	50 *	80 *	80 *	100 *	100 *
42	44 *	44 *	70 *	70 *	100 *	100 *
48	39 *	39 *	62 *	62 *	89 *	89 *
54	35 *	35 *	56 *	56 *	85 *	85 *
60	32 *	32 *	52 *	52 *	78 *	78 *
66	30 *	30 *	48 *	48 *	73 *	73 *
72	28 *	28 *	45 *	45 *	69 *	69 *
75	27 *	27 *	44 *	44 *	67 *	67 *
78	26 *	26 *	43 *	43 *	65 *	65 *
81	26 *	26 *	42 *	42 *	64 *	64 *
84	25 *	25 *	41 *	41 *	63 *	63 *
87	25 *	25 *	41 *	41 *	61	61
90	25 *	25 *	40 *	40 *	61	61
93	24 *	24 *	40 *	40 *	60	60
96	24	24	39	39	59	59

HEIGHT 120 (In.)						
WIDTH (In.)	(M1) NON-REINFORCED		(M2) LIGHT REINFORCED		(M3) HEAVY REINFORCED	
	(+) P.S.F	(-) P.S.F	(+) P.S.F	(-) P.S.F	(+) P.S.F	(-) P.S.F
24	63 *	63 *	100 *	100 *	100 *	100 *
30	51 *	51 *	81 *	81 *	100 *	100 *
36	43 *	43 *	69 *	69 *	100 *	100 *
42	37 *	37 *	60 *	60 *	92 *	92 *
48	33 *	33 *	53 *	53 *	82 *	82 *
54	29 *	29 *	48 *	48 *	72 *	72 *
60	27 *	27 *	44 *	44 *	66 *	66 *
66	25 *	25 *	41 *	41 *	61 *	61 *
72	23 *	23 *	38 *	38 *	58 *	58 *
75	23 *	23 *	37 *	37 *	56 *	56 *
78	22 *	22 *	36 *	36 *	55 *	55 *
81	22 *	22 *	35 *	35 *	53 *	53 *
84	21 *	21 *	35 *	35 *	52 *	52 *
87	21 *	21 *	34 *	34 *	51 *	51 *
90	20 *	20 *	33 *	33 *	50 *	50 *
93	20 *	20 *	33 *	33 *	50 *	50 *
96	20	20	32	32	49	49

M1
NON REINFORCED MULLION

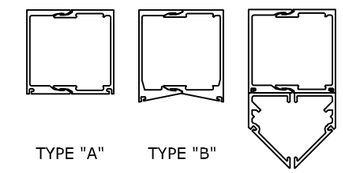

	Ix (in.^4)	Sx (in.^3)
MULLION	4.16	2.4
ALT. MULL.	4.62	2.6
ALUM. REINF.	-	-
STEEL REINF.	-	-

M2
LIGHT REINFORCED MULLION

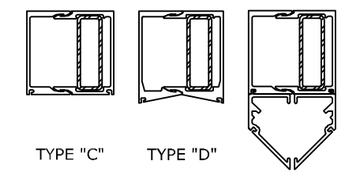

	Ix (in.^4)	Sx (in.^3)
MULLION	4.16	2.4
ALT. MULL.	4.62	2.6
STEEL TUBE	0.89	0.59
TOTAL Ix (TYPE C)	6.741	-
TOTAL Ix (TYPE D)	7.201	-

M3
HEAVY REINFORCED MULLION

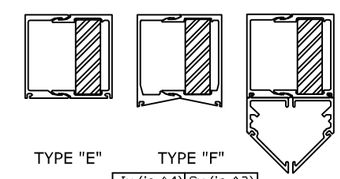

	Ix (in.^4)	Sx (in.^3)
MULLION	4.16	2.4
ALT. MULL.	4.62	2.6
STEEL BAR	2.25	1.5
TOTAL Ix (TYPE E)	10.68	-
TOTAL Ix (TYPE F)	11.145	-

TOTAL Ix=
Ix ALUM + Ix STEEL x 2.9

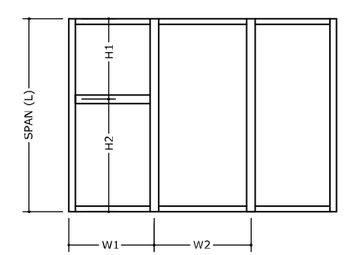

1) "*" = HORIZONTALS MEMBERS ALLOWED
2) MAX TRIB. WIDTH SUPPORTED BY HORIZONTALS = 64in.

FRAME SIZES WITHOUT "*" MAY STILL USE OR INCLUDE HORIZONTALS GIVEN THEY ARE DESIGNED UNDER SITE SPECIFIC ENGINEERING.

MULLION CAPACITIES ARE EQUAL WITH OR WITHOUT HORIZONTALS.

LINEAR INTERPOLATION BETWEEN WIDTHS OR HEIGHTS ALLOWED.

MULLION TRIBUTARY WIDTH
$W = \frac{W1}{2} + \frac{W2}{2}$

HORIZONTAL TRIBUTARY WIDTH
$W = \frac{H1}{2} + \frac{H2}{2}$

FRANK BENNARDO, P.E.
PE# 0046549 CA 9885
09/01/2021
FL#29520.4
ENGINEERING EXPRESS®
POSTAL ADDRESS:
401 W. ATLANTIC AVE. R10 #219
DELRAY BEACH, FL 33444
ENGINEERINGEXPRESS.COM

CRAWFORD TRACEY CORPORATION
3301 S.W. 13th DRIVE
DEERFIELD BEACH, FL, 334422-8101
Phn. (954) 698-6888

PRO-TECH 45SG ALUMINUM CURTAINWALL SYSTEM
FLORIDA STATE APPROVAL

REMARKS	DRWN	CHKD	DATE
FBC 2020 UPDATE	JEM	AJP	10/19/20

COPYRIGHT ENGINEERING EXPRESS®

20-32267

SCALE: NTS UNLESS NOTED

SIDE LOADED SYSTEM

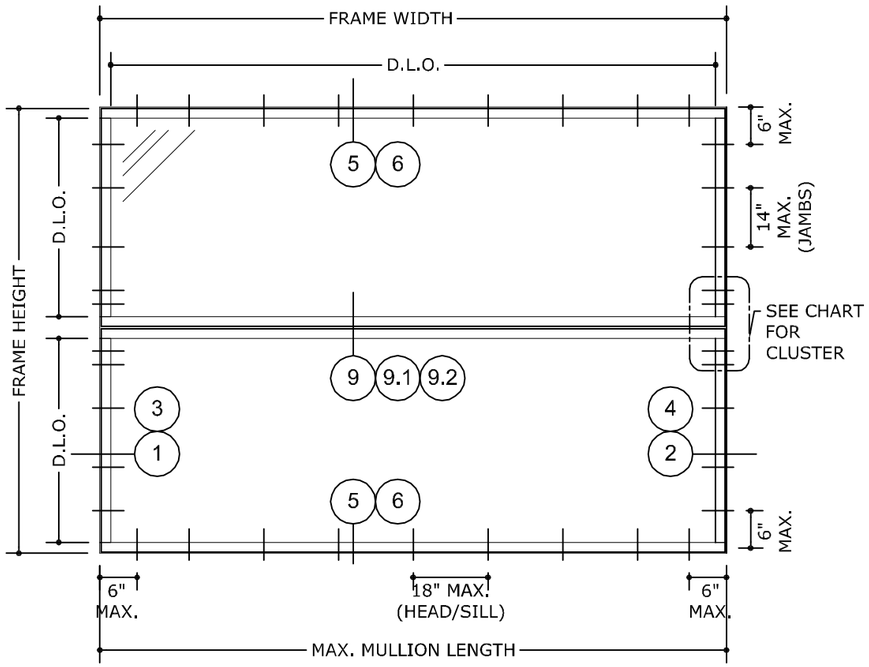

SIDE LOADED SYSTEMS MAY BE USED GIVEN THE SYSTEM IS DESIGNED AND APPROVED BY A PROFESSIONAL ENGINEER BASED ON SITE SPECIFIC CONDITIONS.

MULLION CAPACITIES ARE EQUAL WITH OR WITHOUT HORIZONTALS.

SLOPED SYSTEMS SHALL BE DESIGNED ON A SITE SPECIFIC BASIS WITH APPROVAL FROM LICENSED PROFESSIONAL ENGINEER, AND THE PRODUCT MANUFACTURER.

MULLION TRIBUTARY WIDTH

$$W = \frac{W1}{2} + \frac{W2}{2}$$

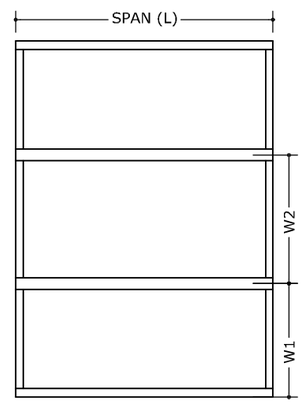

SIDE-LOADED MULLION

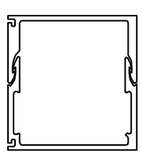

TYPE "A"

	Ix (in.^4)	Sx (in.^3)
MULLION	3.568	2.433
STEEL TUBE	-	-
STEEL BAR	-	-

SIDE-LOADED MULLION

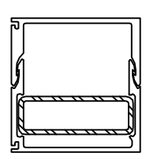

TYPE "C"

	Ix (in.^4)	Sx (in.^3)
MULLION	3.568	2.433
STEEL TUBE	0.147	0.594
STEEL BAR	-	-

SIDE-LOADED MULLION

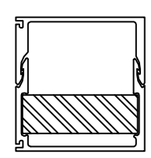

TYPE "E"

	Ix (in.^4)	Sx (in.^3)
MULLION	3.568	2.433
STEEL TUBE	-	-
STEEL BAR	0.250	1.500

SIDE LOADED TABLES (P.S.F.)

WIDTH 72 (In.)						
HEIGHT (In.)	(M1) NON-REINFORCED		(M2) LIGHT REINFORCED		(M3) HEAVY REINFORCED	
	(+) P.S.F	(-) P.S.F	(+) P.S.F	(-) P.S.F	(+) P.S.F	(-) P.S.F
24	100	100	100	100	100	100
30	100	100	100	100	100	100
36	100	100	100	100	100	100
42	100	100	100	100	100	100
48	100	100	100	100	100	100
54	100	100	100	100	100	100
60	100	100	100	100	100	100
66	100	100	100	100	100	100
72	100	100	100	100	100	100
75	100	100	100	100	100	100
78	100	100	100	100	100	100
81	100	100	100	100	100	100
84	100	100	100	100	100	100
87	100	100	100	100	100	100
90	100	100	100	100	100	100
93	100	100	100	100	100	100
96	100	100	100	100	100	100

WIDTH 78 (In.)						
HEIGHT (In.)	(M1) NON-REINFORCED		(M2) LIGHT REINFORCED		(M3) HEAVY REINFORCED	
	(+) P.S.F	(-) P.S.F	(+) P.S.F	(-) P.S.F	(+) P.S.F	(-) P.S.F
24	100	100	100	100	100	100
30	100	100	100	100	100	100
36	100	100	100	100	100	100
42	100	100	100	100	100	100
48	100	100	100	100	100	100
54	100	100	100	100	100	100
60	100	100	100	100	100	100
66	100	100	100	100	100	100
72	100	100	100	100	100	100
75	100	100	100	100	100	100
78	100	100	100	100	100	100
81	100	100	100	100	100	100
84	100	100	100	100	100	100
87	100	100	100	100	100	100
90	100	100	100	100	100	100
93	100	100	100	100	100	100
96	100	100	100	100	100	100

WIDTH 84 (In.)						
HEIGHT (In.)	(M1) NON-REINFORCED		(M2) LIGHT REINFORCED		(M3) HEAVY REINFORCED	
	(+) P.S.F	(-) P.S.F	(+) P.S.F	(-) P.S.F	(+) P.S.F	(-) P.S.F
24	100	100	100	100	100	100
30	100	100	100	100	100	100
36	100	100	100	100	100	100
42	100	100	100	100	100	100
48	100	100	100	100	100	100
54	95	95	100	100	100	100
60	89	89	100	100	100	100
66	85	85	100	100	100	100
72	82	82	100	100	100	100
75	81	81	100	100	100	100
78	80	80	100	100	100	100
81	80	80	100	100	100	100
84	80	80	100	100	100	100
87	80	80	100	100	100	100
90	80	80	100	100	100	100
93	80	80	100	100	100	100
96	80	80	100	100	100	100

FRANK BENNARDO, P.E.
PE# 0046549 CA 9885
09/01/2021
FL#29520.4
ENGINEERING EXPRESS®
POSTAL ADDRESS:
401 W. ATLANTIC AVE. R10 #219
DELRAY BEACH, FL 33444
ENGINEERINGEXPRESS.COM
CRAWFORD TRACEY CORPORATION
3301 S.W. 13th DRIVE
DEERFIELD BEACH, FL, 334422-8101
Phn. (954) 698-6888

PRO-TECH 45SG ALUMINUM CURTAINWALL SYSTEM
FLORIDA STATE APPROVAL

REMARKS	DRWN	CHKD	DATE
FBC 2020 UPDATE	JEM	AJP	10/19/20

COPYRIGHT ENGINEERING EXPRESS®

20-32267

SCALE: NTS UNLESS NOTED

SIDE LOADED SYSTEM

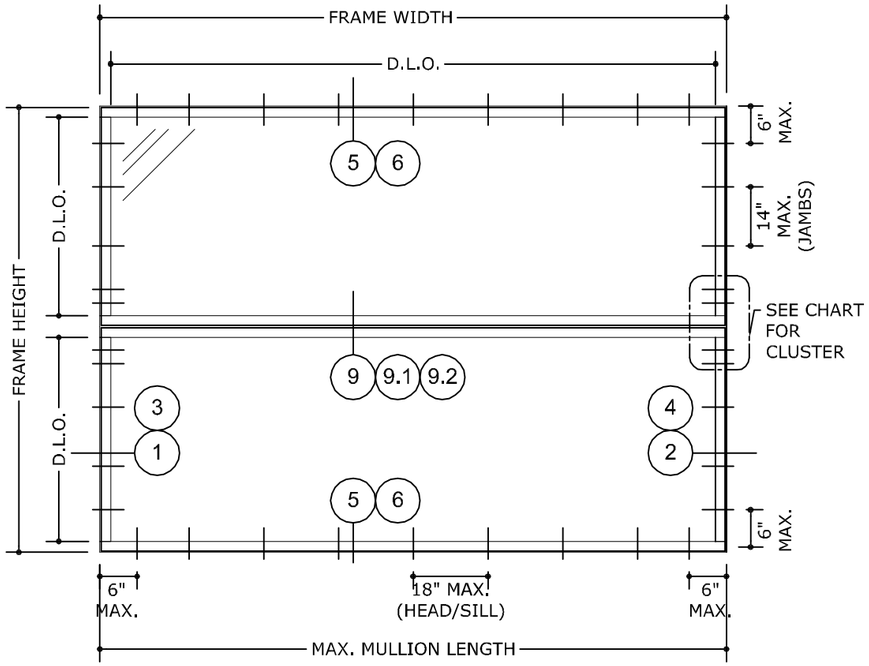

SIDE LOADED SYSTEMS MAY BE USED GIVEN THE SYSTEM IS DESIGNED AND APPROVED BY A PROFESSIONAL ENGINEER BASED ON SITE SPECIFIC CONDITIONS.

MULLION CAPACITIES ARE EQUAL WITH OR WITHOUT HORIZONTALS.

SLOPED SYSTEMS SHALL BE DESIGNED ON A SITE SPECIFIC BASIS WITH APPROVAL FROM LICENSED PROFESSIONAL ENGINEER, AND THE PRODUCT MANUFACTURER.

MULLION TRIBUTARY WIDTH

$$W = \frac{W1}{2} + \frac{W2}{2}$$

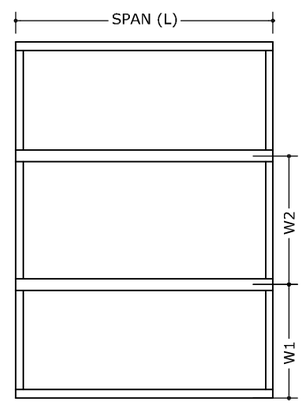

SIDE-LOADED MULLION

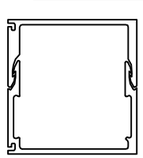

TYPE "A"

	Ix (in.^4)	Sx (in.^3)
MULLION	3.568	2.433
STEEL TUBE	-	-
STEEL BAR	-	-

SIDE-LOADED MULLION

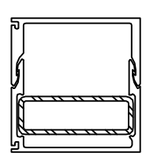

TYPE "C"

	Ix (in.^4)	Sx (in.^3)
MULLION	3.568	2.433
STEEL TUBE	0.147	0.594
STEEL BAR	-	-

SIDE-LOADED MULLION

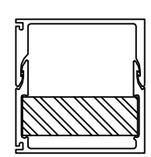

TYPE "E"

	Ix (in.^4)	Sx (in.^3)
MULLION	3.568	2.433
STEEL TUBE	-	-
STEEL BAR	0.250	1.500

SIDE LOADED TABLES (P.S.F.)

WIDTH 90 (In.)						
HEIGHT (In.)	(M1) NON-REINFORCED		(M2) LIGHT REINFORCED		(M3) HEAVY REINFORCED	
	(+) P.S.F	(-) P.S.F	(+) P.S.F	(-) P.S.F	(+) P.S.F	(-) P.S.F
24	100	100	100	100	100	100
30	100	100	100	100	100	100
36	100	100	100	100	100	100
42	91	91	100	100	100	100
48	82	82	100	100	100	100
54	75	75	98	98	100	100
60	71	71	93	93	100	100
66	66	66	100	100	100	100
72	64	64	100	100	100	100
75	63	63	100	100	100	100
78	62	62	100	100	100	100
81	61	61	99	99	100	100
84	61	61	99	99	100	100
87	60	60	98	98	100	100
90	60	60	98	98	100	100
93	60	60	98	98	100	100
96	60	60	98	98	100	100

WIDTH 96 (In.)						
HEIGHT (In.)	(M1) NON-REINFORCED		(M2) LIGHT REINFORCED		(M3) HEAVY REINFORCED	
	(+) P.S.F	(-) P.S.F	(+) P.S.F	(-) P.S.F	(+) P.S.F	(-) P.S.F
24	100	100	100	100	100	100
30	100	100	100	100	100	100
36	85	85	100	100	100	100
42	75	75	100	100	100	100
48	67	67	94	94	100	100
54	61	61	86	86	100	100
60	56	56	80	80	100	100
66	53	53	86	86	100	100
72	50	50	82	82	100	100
75	49	49	81	81	100	100
78	49	49	79	79	100	100
81	48	48	78	78	100	100
84	47	47	77	77	100	100
87	47	47	77	77	100	100
90	47	47	77	77	100	100
93	47	47	76	76	100	100
96	47	47	76	76	100	100

WIDTH 102 (In.)						
HEIGHT (In.)	(M1) NON-REINFORCED		(M2) LIGHT REINFORCED		(M3) HEAVY REINFORCED	
	(+) P.S.F	(-) P.S.F	(+) P.S.F	(-) P.S.F	(+) P.S.F	(-) P.S.F
24	100	100	100	100	100	100
30	83	83	100	100	100	100
36	70	70	100	100	100	100
42	62	62	92	92	100	100
48	55	55	82	82	100	100
54	50	50	75	75	100	100
60	46	46	75	75	100	100
66	43	43	70	70	100	100
72	41	41	66	66	96	96
75	40	40	65	65	95	95
78	39	39	64	64	93	93
81	38	38	63	63	92	92
84	38	38	62	62	91	91
87	37	37	61	61	90	90
90	37	37	61	61	89	89
93	37	37	60	60	89	89
96	37	37	60	60	88	88

FRANK BENNARDO, P.E.
PE# 0046549 CA 9885
09/01/2021
FL#29520.4
ENGINEERING EXPRESS®
POSTAL ADDRESS:
401 W. ATLANTIC AVE. R10 #219
DELRAY BEACH, FL 33444
ENGINEERINGEXPRESS.COM
CRAWFORD TRACEY CORPORATION
3301 S.W. 13th DRIVE
DEERFIELD BEACH, FL, 334422-8101
Phn. (954) 698-6888

PRO-TECH 45SG ALUMINUM CURTAINWALL SYSTEM
FLORIDA STATE APPROVAL

REMARKS	DRWN	CHKD	DATE
FBC 2020 UPDATE	JEM	AJP	10/19/20

COPYRIGHT ENGINEERING EXPRESS®

20-32267

SCALE: NTS UNLESS NOTED

SIDE LOADED SYSTEM

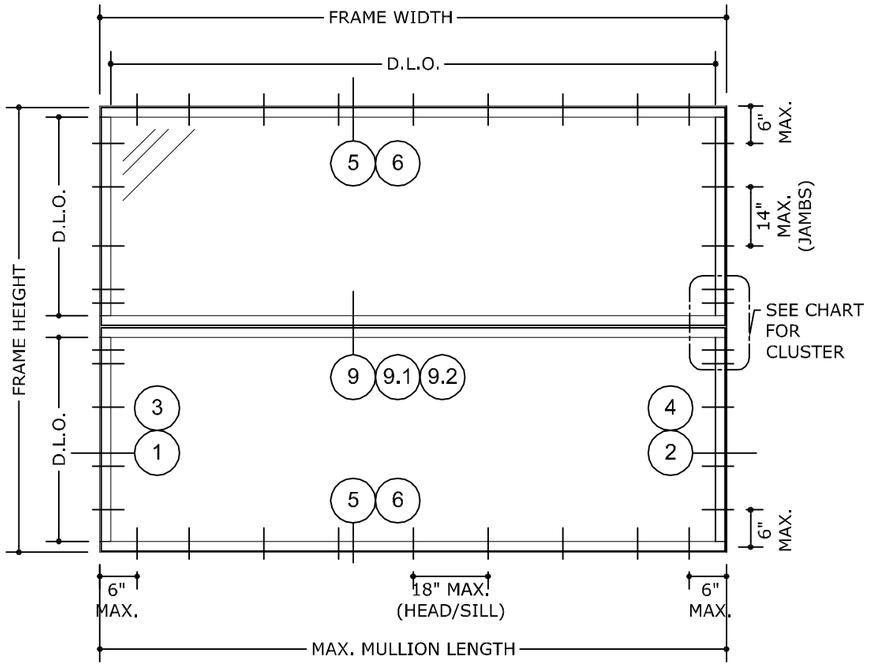

SIDE LOADED SYSTEMS MAY BE USED GIVEN THE SYSTEM IS DESIGNED AND APPROVED BY A PROFESSIONAL ENGINEER BASED ON SITE SPECIFIC CONDITIONS.

MULLION CAPACITIES ARE EQUAL WITH OR WITHOUT HORIZONTALS.

SLOPED SYSTEMS SHALL BE DESIGNED ON A SITE SPECIFIC BASIS WITH APPROVAL FROM LICENSED PROFESSIONAL ENGINEER, AND THE PRODUCT MANUFACTURER.

MULLION TRIBUTARY WIDTH

$$W = \frac{W1}{2} + \frac{W2}{2}$$

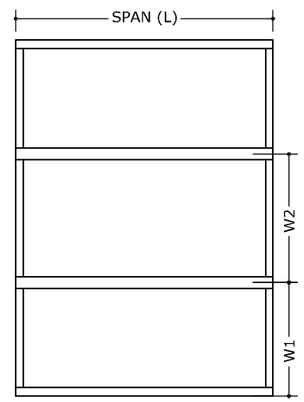

SIDE-LOADED MULLION

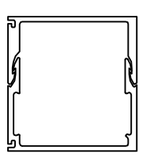

TYPE "A"

	Ix (in.^4)	Sx (in.^3)
MULLION	3.568	2.433
STEEL TUBE	-	-
STEEL BAR	-	-

SIDE-LOADED MULLION

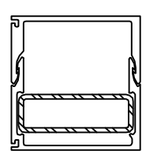

TYPE "C"

	Ix (in.^4)	Sx (in.^3)
MULLION	3.568	2.433
STEEL TUBE	0.147	0.594
STEEL BAR	-	-

SIDE-LOADED MULLION

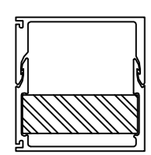

TYPE "E"

	Ix (in.^4)	Sx (in.^3)
MULLION	3.568	2.433
STEEL TUBE	-	-
STEEL BAR	0.250	1.500

SIDE LOADED TABLES (P.S.F.)

WIDTH 108 (In.)						
HEIGHT (In.)	(M1) NON-REINFORCED		(M2) LIGHT REINFORCED		(M3) HEAVY REINFORCED	
	(+) P.S.F	(-) P.S.F	(+) P.S.F	(-) P.S.F	(+) P.S.F	(-) P.S.F
24	86	86	100	100	100	100
30	70	70	100	100	100	100
36	60	60	94	94	100	100
42	52	52	82	82	100	100
48	46	46	73	73	100	100
54	41	41	67	67	100	100
60	38	38	62	62	93	93
66	35	35	58	58	87	87
72	33	33	55	55	82	82
75	33	33	53	53	80	80
78	32	32	52	52	79	79
81	31	31	51	51	77	77
84	31	31	50	50	76	76
87	30	30	49	49	75	75
90	30	30	49	49	74	74
93	30	30	48	48	73	73
96	29	29	48	48	72	72

WIDTH 114 (In.)						
HEIGHT (In.)	(M1) NON-REINFORCED		(M2) LIGHT REINFORCED		(M3) HEAVY REINFORCED	
	(+) P.S.F	(-) P.S.F	(+) P.S.F	(-) P.S.F	(+) P.S.F	(-) P.S.F
24	73	73	100	100	100	100
30	59	59	94	94	100	100
36	50	50	80	80	100	100
42	44	44	70	70	100	100
48	39	39	62	62	89	89
54	35	35	56	56	85	85
60	32	32	52	52	78	78
66	30	30	48	48	73	73
72	28	28	45	45	69	69
75	27	27	44	44	67	67
78	26	26	43	43	65	65
81	26	26	42	42	64	64
84	25	25	41	41	63	63
87	25	25	41	41	61	61
90	25	25	40	40	61	61
93	24	24	40	40	60	60
96	24	24	39	39	59	59

WIDTH 120 (In.)						
HEIGHT (In.)	(M1) NON-REINFORCED		(M2) LIGHT REINFORCED		(M3) HEAVY REINFORCED	
	(+) P.S.F	(-) P.S.F	(+) P.S.F	(-) P.S.F	(+) P.S.F	(-) P.S.F
24	63	63	100	100	100	100
30	51	51	81	81	100	100
36	43	43	69	69	100	100
42	37	37	60	60	92	92
48	33	33	53	53	82	82
54	29	29	48	48	72	72
60	27	27	44	44	66	66
66	25	25	41	41	61	61
72	23	23	38	38	58	58
75	23	23	37	37	56	56
78	22	22	36	36	55	55
81	22	22	35	35	53	53
84	21	21	35	35	52	52
87	21	21	34	34	51	51
90	20	20	33	33	50	50
93	20	20	33	33	50	50
96	20	20	32	32	49	49

FRANK BENNARDO, P.E.
PE# 0046549 CA 9885
09/01/2021
FL#29520.4
ENGINEERING EXPRESS®
POSTAL ADDRESS:
401 W. ATLANTIC AVE. R10 #219
DELRAY BEACH, FL 33444
ENGINEERINGEXPRESS.COM
CRAWFORD TRACEY CORPORATION
3301 S.W. 13th DRIVE
DEERFIELD BEACH, FL, 334422-8101
Phn. (954) 698-6888

PRO-TECH 45SG ALUMINUM CURTAINWALL SYSTEM
FLORIDA STATE APPROVAL

REMARKS	DRWN	CHKD	DATE
FBC 2020 UPDATE	JEM	AJP	10/19/20

COPYRIGHT ENGINEERING EXPRESS®

20-32267

SCALE: NTS UNLESS NOTED

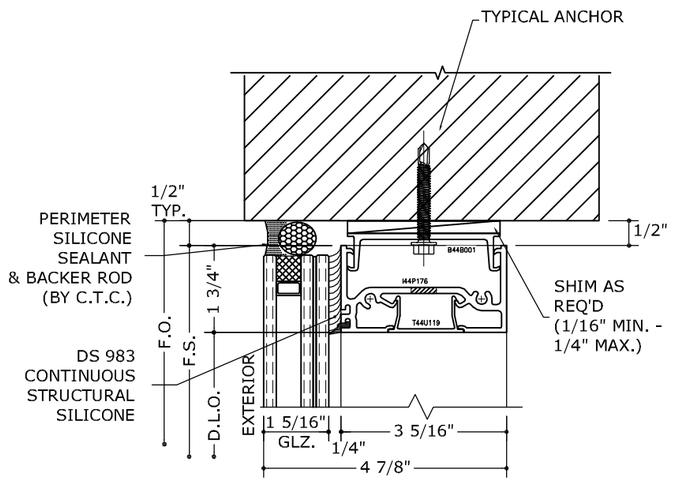

1 HEAD DETAIL

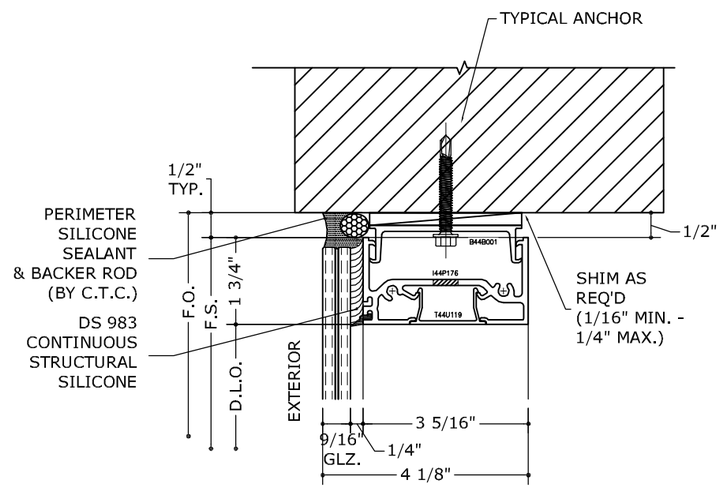

3 HEAD DETAIL

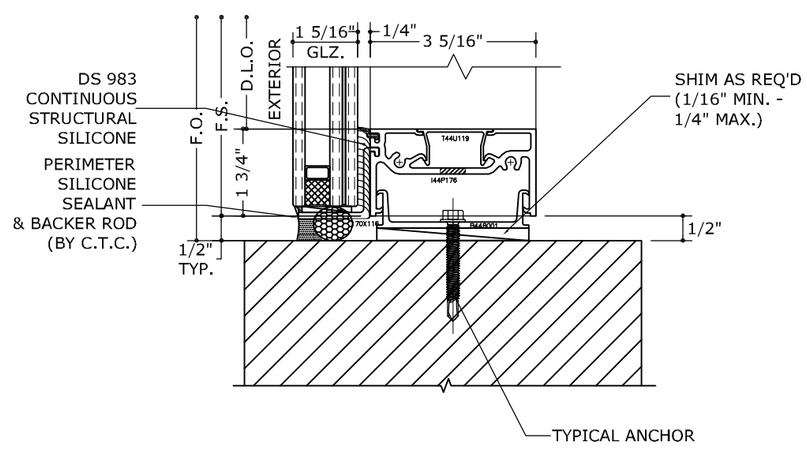

2 SILL DETAIL

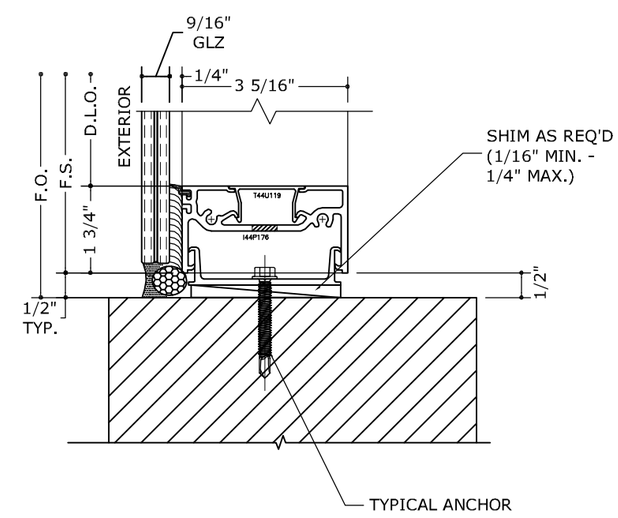

4 SILL DETAIL

NOTE:
WOOD BUCKS AND METAL STRUCTURES NOT BY CRAWFORD TRACEY MUST SUPPORT LOADS IMPOSED BY GLAZING SYSTEM AND TRANSFER THEM TO THE BUILDING STRUCTURE.

NOTE:
- SHIM SIZES GREATER THAT THE ONE SHOWN IN THE DETAILS ARE PERMITTED UNDER SITE SPECIFIC CONDITIONS.
- MODIFICATIONS TO THE ANCHORING WILL BE REQUIRED FOR THESE CONDITIONS AND SHALL BE DONE BY A PROFESSIONAL ENGINEER.

FRANK BENNARDO, P.E.
PE# 0046549 CA 9885
09/01/2021
FL#29520.4
ENGINEERING EXPRESS®
POSTAL ADDRESS:
401 W. ATLANTIC AVE. R10 #219
DELRAY BEACH, FL 33444
ENGINEERINGEXPRESS.COM

CRAWFORD TRACEY CORPORATION
3301 S.W. 13th DRIVE
DEERFIELD BEACH, FL, 334422-8101
Phn. (954) 698-6888

PRO-TECH 45SG ALUMINUM CURTAINWALL SYSTEM
FLORIDA STATE APPROVAL

REMARKS	DRWN	CHKD	DATE
FBC 2020 UPDATE	JEM	AJP	10/19/20
-	-	-	-
-	-	-	-
-	-	-	-
-	-	-	-

COPYRIGHT ENGINEERING EXPRESS®

20-32267

SCALE: NTS UNLESS NOTED

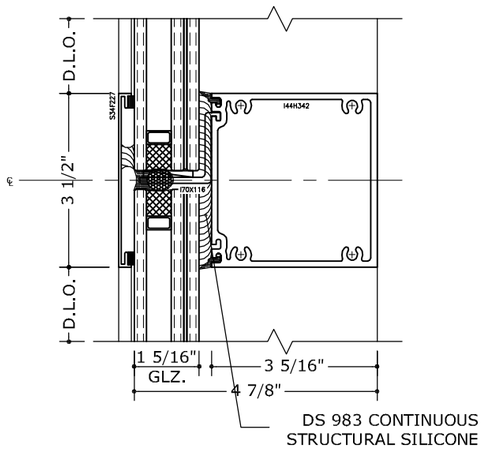

7 HORIZONTAL INTERMEDIATE DETAIL

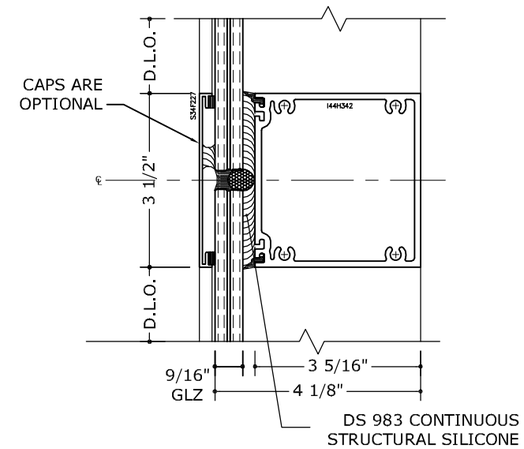

8 HORIZONTAL INTERMEDIATE DETAIL

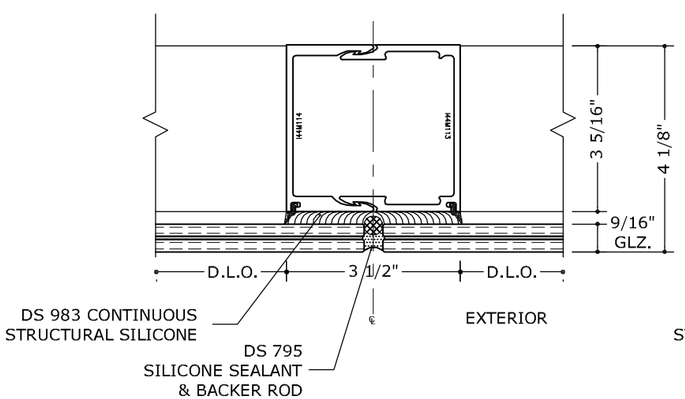

9 VERTICAL INTERMEDIATE DETAIL

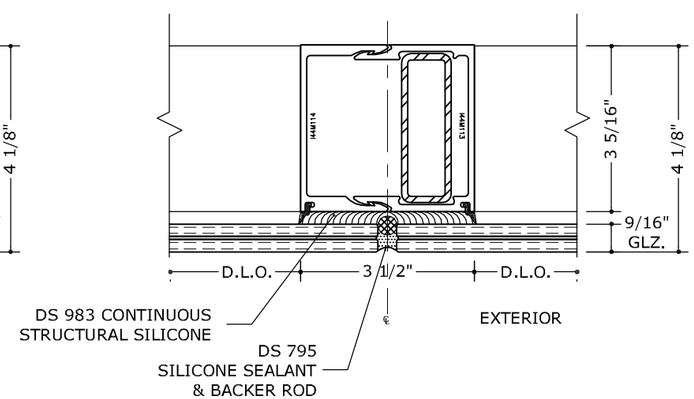

9.1 VERTICAL INTERMEDIATE DETAIL WITH LIGHT REINFORCEMENT

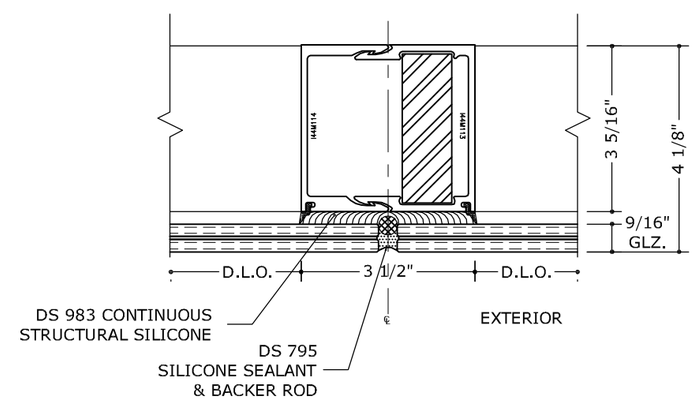

9.2 VERTICAL INTERMEDIATE DETAIL WITH HEAVY REINFORCEMENT

FRANK BENNARDO, P.E.
PE# 0046549 CA 9885
09/01/2021

FL#29520.4

ENGINEERING EXPRESS®
POSTAL ADDRESS:
401 W. ATLANTIC AVE. R10 #219
DELRAY BEACH, FL 33444
ENGINEERINGEXPRESS.COM

CRAWFORD TRACEY CORPORATION
3301 S.W. 13th DRIVE
DEERFIELD BEACH, FL, 334422-8101
Phn. (954) 698-6888

PRO-TECH 45SG ALUMINUM CURTAINWALL SYSTEM
FLORIDA STATE APPROVAL

REMARKS	DRWN	CHKD	DATE
FBC 2020 UPDATE	JEM	AJP	10/19/20
-	-	-	-
-	-	-	-
-	-	-	-
-	-	-	-

COPYRIGHT ENGINEERING EXPRESS®

20-32267

SCALE: NTS UNLESS NOTED

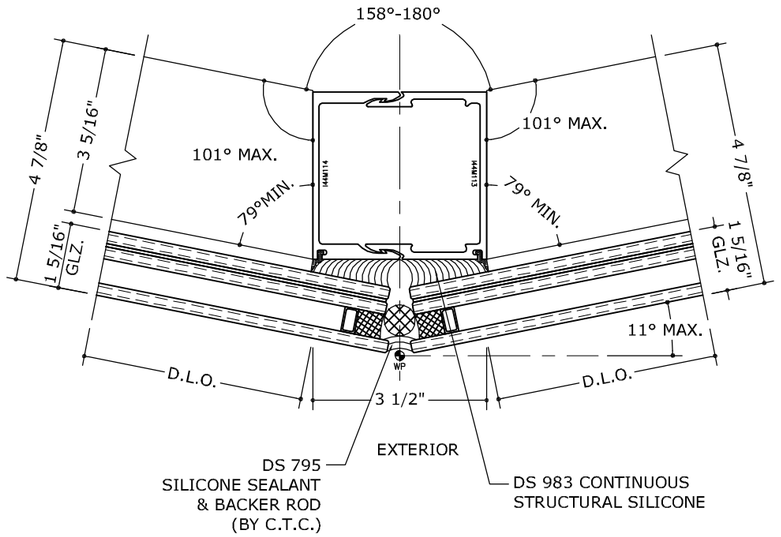

10 VERTICAL INTERMEDIATE DETAIL

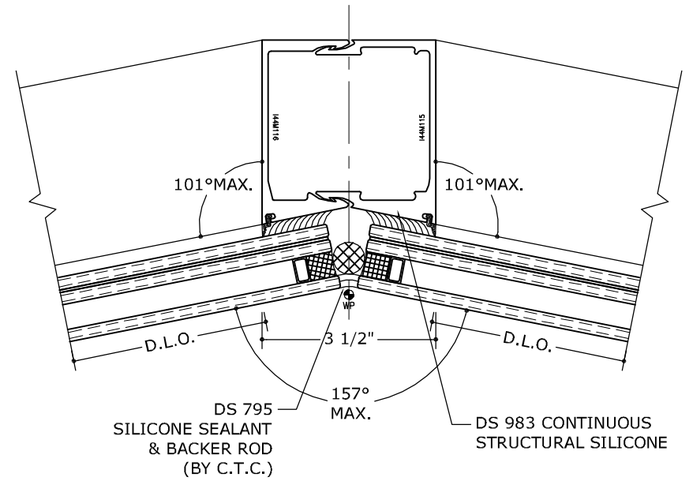

11 VERTICAL INTERMEDIATE DETAIL

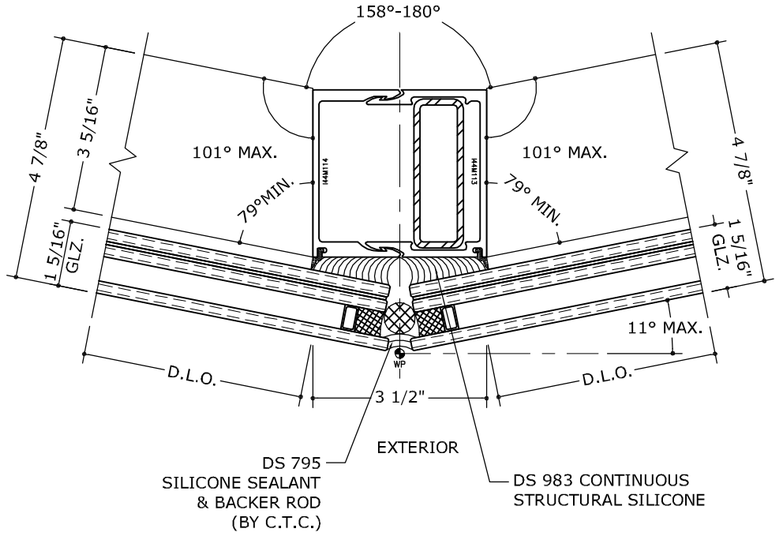

10.1 VERTICAL INTERMEDIATE DETAIL WITH LIGHT REINFORCEMENT

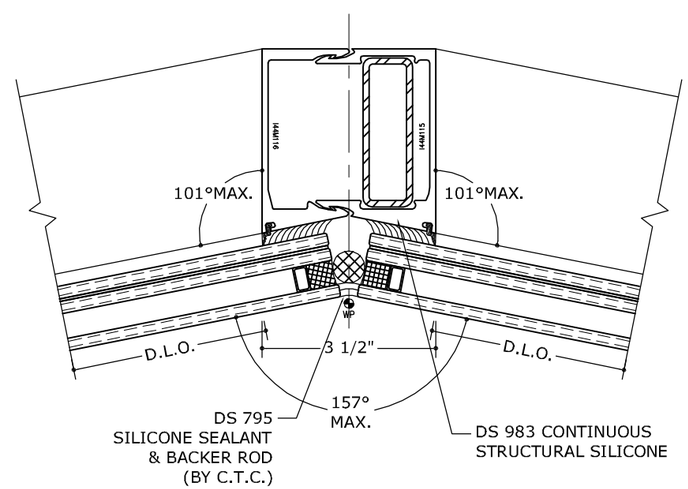

11.1 VERTICAL INTERMEDIATE DETAIL WITH LIGHT REINFORCEMENT

FRANK BENNARDO, P.E.
PE# 0046549 CA 9885
09/01/2021
FL#29520.4
ENGINEERING EXPRESS®
POSTAL ADDRESS:
401 W. ATLANTIC AVE. R10 #219
DELRAY BEACH, FL 33444
ENGINEERINGEXPRESS.COM

CRAWFORD TRACEY CORPORATION
3301 S.W. 13th DRIVE
DEERFIELD BEACH, FL, 334422-8101
Phn. (954) 698-6888

PRO-TECH 455G ALUMINUM CURTAINWALL SYSTEM
FLORIDA STATE APPROVAL

REMARKS	DRWN	CHKD	DATE
FBC 2020 UPDATE	JEM	AJP	10/19/20
-	-	-	-
-	-	-	-
-	-	-	-
-	-	-	-

COPYRIGHT ENGINEERING EXPRESS®

20-32267

SCALE: NTS UNLESS NOTED

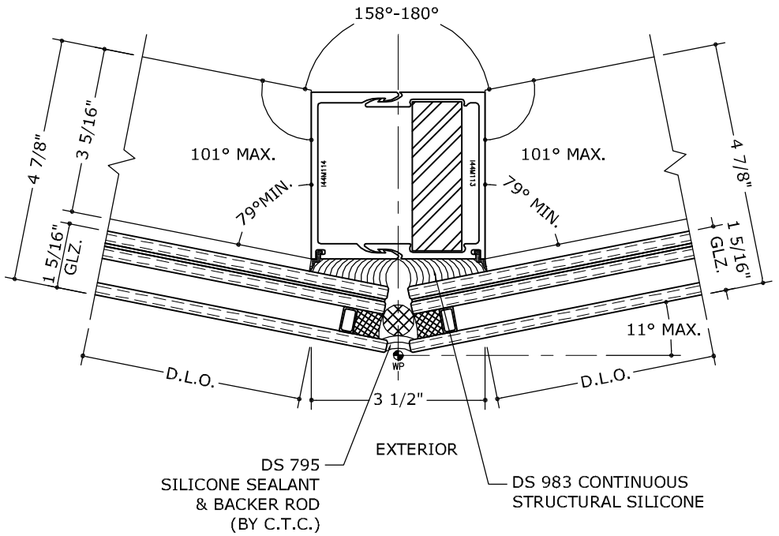

10.2 VERTICAL INTERMEDIATE DETAIL WITH HEAVY REINFORCEMENT

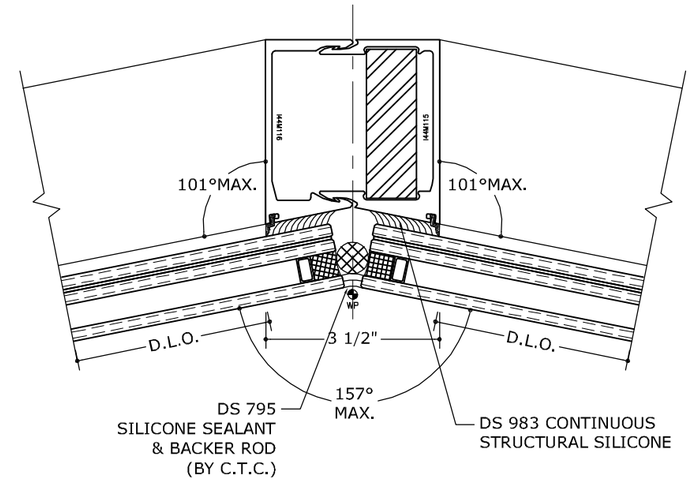

11.2 VERTICAL INTERMEDIATE DETAIL WITH HEAVY REINFORCEMENT

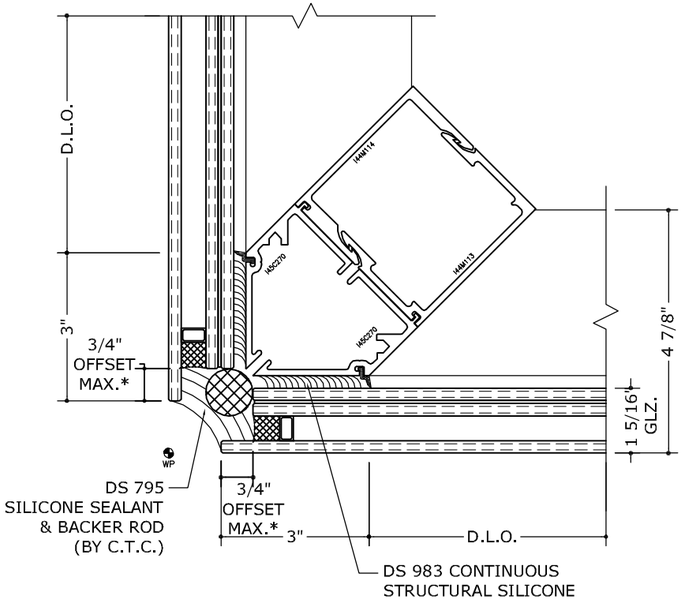

12 VERTICAL INTERMEDIATE DETAIL

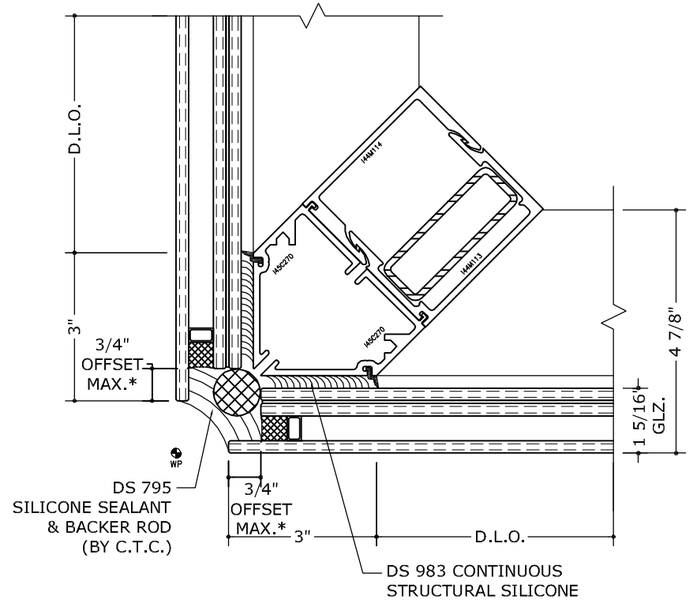

12.1 VERTICAL INTERMEDIATE DETAIL WITH LIGHT REINFORCEMENT

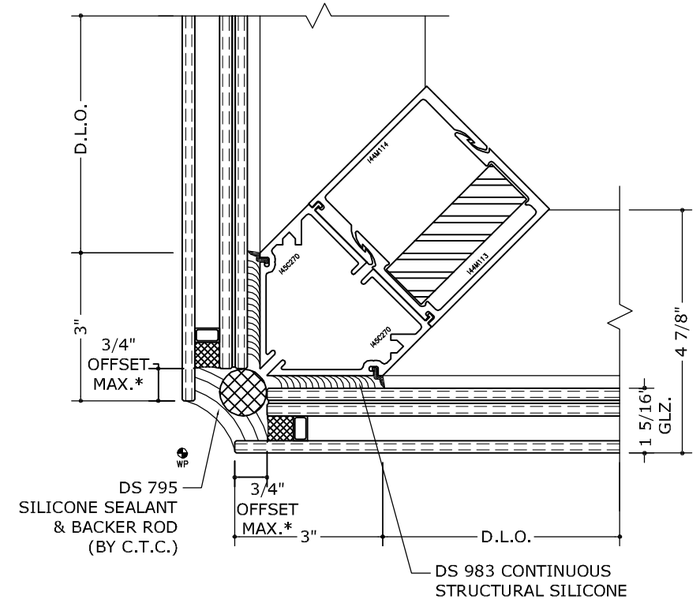

12.2 VERTICAL INTERMEDIATE DETAIL WITH HEAVY REINFORCEMENT

*= TO BE VERIFIED AND APPROVED BY GLASS MANUFACTURER.

FRANK BENNARDO, P.E.
PE# 0046549 CA 9885
09/01/2021
FL#29520.4
ENGINEERING EXPRESS®
POSTAL ADDRESS:
401 W. ATLANTIC AVE. R10 #219
DELRAY BEACH, FL 33444
ENGINEERINGEXPRESS.COM

CRAWFORD TRACEY CORPORATION
3301 S.W. 13th DRIVE
DEERFIELD BEACH, FL, 334422-8101
Phn. (954) 698-6888

PRO-TECH 45SG ALUMINUM CURTAINWALL SYSTEM
FLORIDA STATE APPROVAL

REMARKS	DRWN	CHKD	DATE
FBC 2020 UPDATE	JEM	AJP	10/19/20

COPYRIGHT ENGINEERING EXPRESS®

20-32267

SCALE: NTS UNLESS NOTED

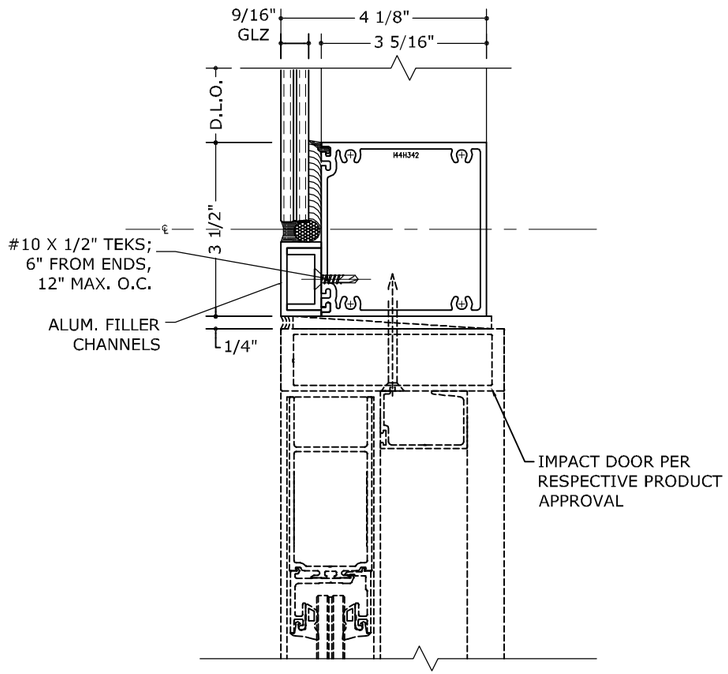

13 HORIZONTAL AT DOOR HEADER DETAIL

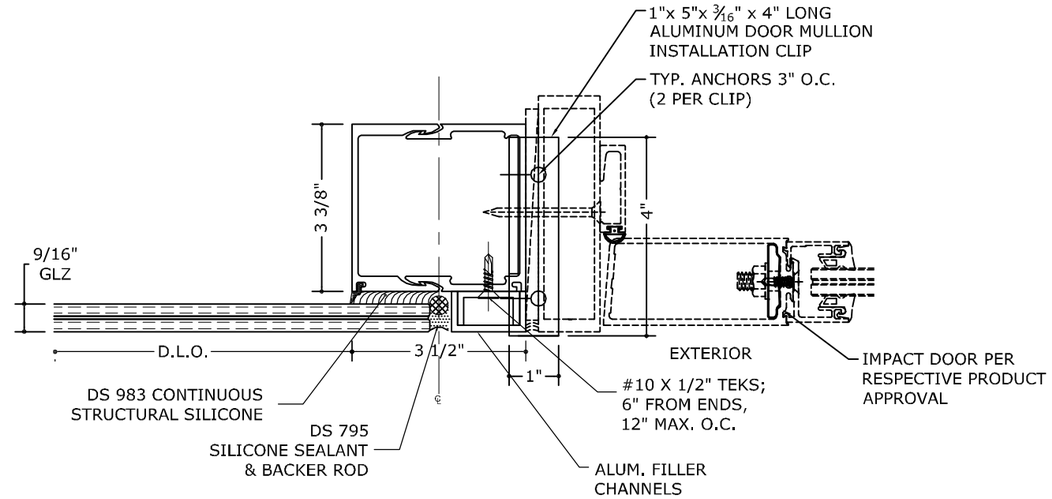

14 INTERMEDIATE VERTICAL DOOR JAMB DETAIL

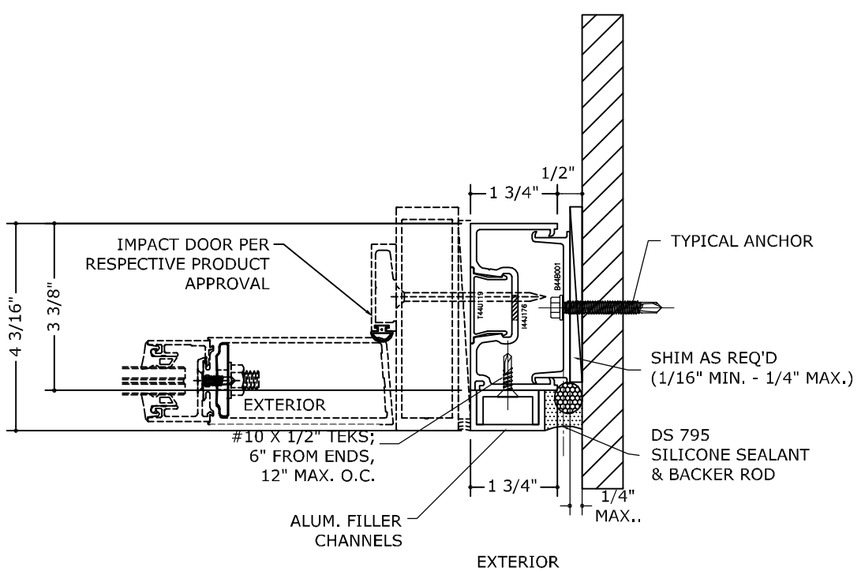

15 VERTICAL AT DOOR JAMB DETAIL

NOTE:
- SHIM SIZES GREATER THAT THE ONE SHOWN IN THE DETAILS ARE PERMITTED UNDER SITE SPECIFIC CONDITIONS.
- MODIFICATIONS TO THE ANCHORING WILL BE REQUIRED FOR THESE CONDITIONS AND SHALL BE DONE BY A PROFESSIONAL ENGINEER.

FRANK BENNARDO, P.E.
PE# 0046549 CA 9885
09/01/2021
FL#29520.4
ENGINEERING EXPRESS®
POSTAL ADDRESS:
401 W. ATLANTIC AVE. R10 #219
DELRAY BEACH, FL 33444
ENGINEERINGEXPRESS.COM

CRAWFORD TRACEY CORPORATION
3301 S.W. 13th DRIVE
DEERFIELD BEACH, FL, 334422-8101
Phn. (954) 698-6888

PRO-TECH 45SG ALUMINUM CURTAINWALL SYSTEM
FLORIDA STATE APPROVAL

REMARKS	DRWN	CHKD	DATE
FBC 2020 UPDATE	JEM	AJP	10/19/20
-	-	-	-
-	-	-	-
-	-	-	-
-	-	-	-

COPYRIGHT ENGINEERING EXPRESS®

20-32267

SCALE: NTS UNLESS NOTED

SYSTEM 45 SG, 7 SG, 9 SG & 14 SG CURTAIN WALL SYSTEM INTEGRATED VERTICAL MULLION ALTERNATIVE DESIGN

THIS SHEET IS INTENDED TO PROVIDE APPROVAL FOR THE INTEGRATION OF CRAWFORD TRACEY CORPORATION SERIES 45SG, 7 SG, 9 SG AND 14 SG CURTAIN WALL SYSTEM

DETERMINATION OF GLASS TYPE, SIZE AND PRESSURE SHALL BE BASED OFF OF THE SMALLER SYSTEM THAT IT IS BEING INTEGRATED WITH.

- FOR EXAMPLE: WHEN TRANSITIONING FROM THE 9 SG SYSTEM TO THE 7 SG SYSTEM THE GLASS TYPE, SIZE AND PRESSURE SHALL BE IN ACCORDANCE WITH THE PROTECH 7 SG SYSTEM

DETERMINATION OF MULLION TYPE, SIZE AND PRESSURE SHALL BE BASED OFF OF THE SYSTEM WHICH THE MULLION IS BEING INTEGRATED WITH.

- FOR EXAMPLE: WHEN TRANSITIONING FROM THE 9 SG SYSTEM TO THE 7 SG SYSTEM THE MULLION TYPE, SIZE AND PRESSURE IS PERMITTED TO BE IN ACCORDANCE WITH THE PROTECH 9 SG SYSTEM

DETERMINATION OF ANCHOR TYPE, QUANTITY AND PRESSURE SHALL BE BASED OFF OF THE LARGER SYSTEM THAT IT IS BEING INTEGRATED WITH.

- FOR EXAMPLE: WHEN TRANSITIONING FROM THE 9 SG SYSTEM TO THE 7 SG SYSTEM THE ANCHOR TYPE, QUANTITY AND PRESSURE SHALL BE IN ACCORDANCE WITH THE PROTECH 9 SG SYSTEM SIZES

NOTE:
INTEGRATION OF PRO-TECH SYSTEMS ARE NOT REQUIRED TO BE IN THE ORDER SHOWN ON THIS PAGE. IT IS PERMITTED FOR ANY OF THE PRO-TECH SYSTEMS TO BE INTEGRATED WITH EACH OTHER, REGARDLESS OF THE SIZE.

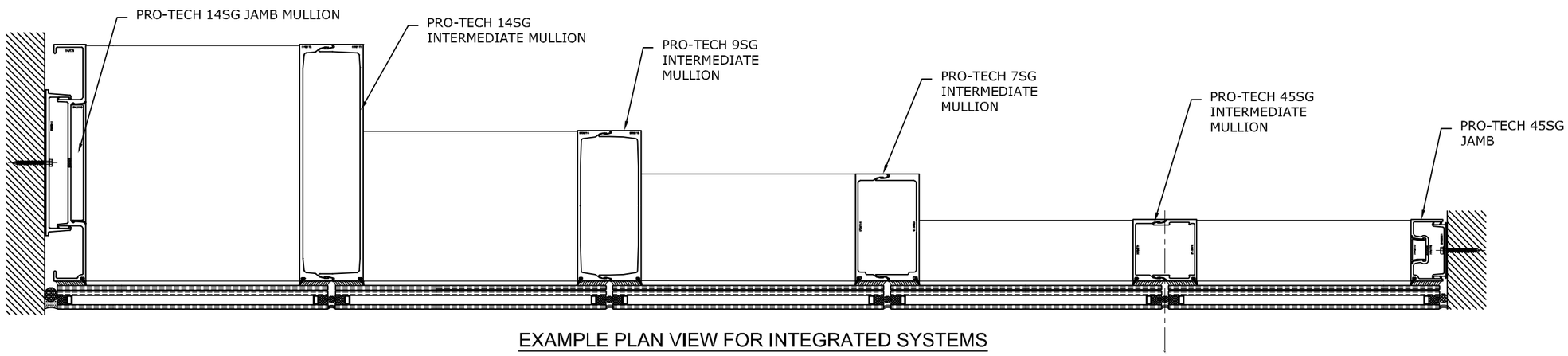

EXAMPLE PLAN VIEW FOR INTEGRATED SYSTEMS

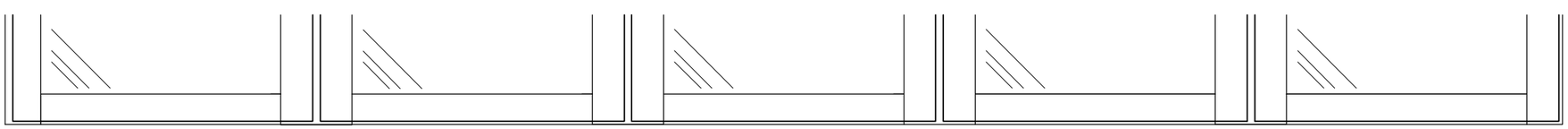

EXAMPLE ELEVATION FOR INTEGRATED SYSTEMS

SYSTEM 45 SG, 7 SG, 9 SG & 14 SG CURTAIN WALL SYSTEM INTEGRATED HORIZONTAL MULLION ALTERNATIVE DESIGN

THIS SHEET IS INTENDED TO PROVIDE APPROVAL FOR THE INTEGRATION OF CRAWFORD TRACEY CORPORATION SERIES 45SG, 7 SG, 9 SG AND 14 SG CURTAIN WALL SYSTEM

DETERMINATION OF GLASS TYPE, SIZE AND PRESSURE SHALL BE BASED OFF OF THE MAXIMUM ALLOWABLE WIDTH OF THE HORIZONTAL MEMBER THAT IT IS BEING INTEGRATED INTO THE VERTICAL SYSTEM .

- FOR EXAMPLE: WHEN INCORPORATING THE 7 SG SYSTEM HORIZONTAL INTO THE 9 SG SYSTEM. THE GLASS TYPE, SIZE AND PRESSURE SHALL BE IN ACCORDANCE WITH THE MAXIMUM WIDTH OF THE HORIZONTAL FROM THE PROTECH 7 SG SYSTEM

DETERMINATION OF HORIZONTAL MULLION TYPE, SIZE AND PRESSURE SHALL BE BASED OFF OF THE HORIZONTAL MULLION'S RESPECTIVE PRODUCT APPROVAL

- FOR EXAMPLE: WHEN INCORPORATING THE 7 SG SYSTEM HORIZONTAL MULLION INTO THE 9 SG SYSTEM. THE 7 SG HORIZONTAL MULLION TYPE, SIZE AND PRESSURE IS LIMITED TO THE MAXIMUM SIZE AND PRESSURE RESPECTIVE TO THE HORIZONTAL MULLION MEMBER IN THE 7 SG PRODUCT APPROVAL

MAXIMUM HORIZONTAL MEMBER SIZE PER SYSTEM	
SYSTEM	WIDTH (in.)
45 SG	93 in, 120 in.
7 SG	125 in. , 68* in.
9 SG	125 in. , 68* in.
14 SG	125 in.

*=MAX WIDTH FOR MEMBER WITH SUNSHADE
_ = MEMBER IS A HORIZONTAL ORIENTED MULLION

NOTE:
MAX HORIZONTAL LENGTH LISTED ABOVE IS BASED ON THE MINIMUM TESTED TRIBUTARY WIDTH AND DESIGN PRESSURES. IF THE MAXIMUM SPAN CONDITION IS REQUIRED TO ACHIEVE DESIGN INTENT, THEN THE CONDITION SHALL BE REVIEWED AND APPROVED BY BOTH THE PRODUCT MANUFACTURER AND A LICENSED PROFESSIONAL ENGINEER.

FRANK BENNARDO, P.E.
PE# 0046549 CA 9885
09/01/2021

FL#29520.4

ENGINEERING EXPRESS®
POSTAL ADDRESS:
401 W. ATLANTIC AVE. R10 #219
DELRAY BEACH, FL 33444
ENGINEERINGEXPRESS.COM

CRAWFORD TRACEY CORPORATION
3301 S.W. 13th DRIVE
DEERFIELD BEACH, FL, 334422-8101
Phn. (954) 698-6888

PRO-TECH 45SG ALUMINUM CURTAINWALL SYSTEM
FLORIDA STATE APPROVAL

REMARKS	DRWN	CHKD	DATE
FBC 2020 UPDATE	JEM	AJP	10/19/20
-	-	-	-
-	-	-	-
-	-	-	-
-	-	-	-

COPYRIGHT ENGINEERING EXPRESS®

20-32267

SCALE: NTS UNLESS NOTED

FASTENER SCHEDULE

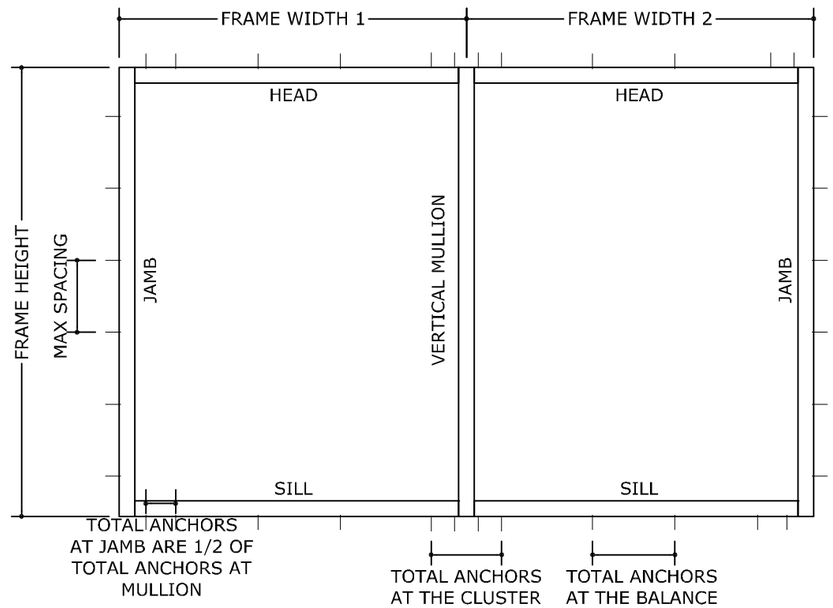

FASTENER SCHEDULE

ANCHOR TYPE	ANCHOR DIAMETER	TYPE	MANUFACTURER	SUBSTRATE	MIN EMBEDMENT (IN)	MIN EDGE DISTANCE (IN)	SPACING (IN)
A	5/16"	ULTRACON ANCHOR	DEWALT	CONCRETE (f'c= 3 KSI MIN.) OR GROUT FILLED CMU BLOCK (f'm= 2 KSI MIN.)	2	3-1/8	3-3/4" O.C.
B	1/4"-14	"DRIL-FLEX" SELF-DRILLING SCREWS (GR. 5 MIN.)	DEWALT	STEEL: 1/8" THK. MIN. (Fy=36 KSI MIN.) ALUM: 1/8" THK. MIN. (6063-T5 MIN.)	FULL	1"	4" O.C.
C	5/16"	ULTRACON ANCHOR OR LAG SCREW	DEWALT	2X WOOD BUCK SG=0.55	1-1/2	1-1/2	4" O.C.

NOTE:

- $\frac{1}{4}$'' Ø ANCHORS OF ANY KIND ARE PERMITTED UNDER SITE SPECIFIC CONDITIONS.
- ANCHOR CAPACITIES BASED ON $\frac{1}{4}$" SHIM, GREATER SHIMMING MAY BE USED UNDER SITE SPECIFIC CONDITIONS
- IF ANY OF THE ABOVE MODIFICATIONS ARE APPLIED, THE REVISED ANCHORING CONDITIONS SHALL BE DESIGNED AND APPROVED BY A LICENSED PROFESSIONAL ENGINEER & THE PRODUCT MANUFACTURER.

NOTE:

ANCHORING FOR SLOPED SYSTEMS SHALL BE DESIGNED ON A SITE SPECIFIC BASIS WITH APPROVAL FROM LICENSED PROFESSIONAL ENGINEER, AND THE PRODUCT MANUFACTURER.

NOTE:

IF A LESSER EDGE DISTANCE, EMBEDMENT AND/OR SPACING IS DESIRED TO ACHIEVE THE DESIGN INTENT THEN THE PRODUCT ANCHORING SHALL BE DESIGNED ON A SITE SPECIFIC BASIS AND APPROVED BY LICENSED PROFESSIONAL ENGINEER.

FRANK BENNARDO, P.E.
PE# 0046549 CA 9885
09/01/2021

FL#29520.4

ENGINEERING EXPRESS®
POSTAL ADDRESS:
401 W. ATLANTIC AVE. R10 #219
DELRAY BEACH, FL 33444
ENGINEERINGEXPRESS.COM

CRAWFORD TRACEY CORPORATION
3301 S.W. 13th DRIVE
DEERFIELD BEACH, FL, 334422-8101
Phn. (954) 698-6888

PRO-TECH 45SG ALUMINUM CURTAINWALL SYSTEM
FLORIDA STATE APPROVAL

REMARKS	DRWN	CHKD	DATE
FBC 2020 UPDATE	JEM	AJP	10/19/20

COPYRIGHT ENGINEERING EXPRESS®

20-32267

SCALE: NTS UNLESS NOTED

MAXIMUM ALLOWABLE STRESS DESIGN PRESSURE RATING FOR HEAD, SILL AND JAMB CONNECTIONS-ANCHOR TYPE A "MAX SHIM = 1/4"

FRAME HEIGHT (H)	TRIBUTARY (W)	TOTAL NUMBER OF ANCHORS AT THE CLUSTER-ANCHOR TYPE A																				
		2			4			6			8			10			12			16		
		MAX PRESSURE (PSF)	HEAD/SILL MAX ANCHOR SPACING (IN)	JAMBS MAX ANCHOR SPACING (IN)	MAX PRESSURE (PSF)	HEAD/SILL MAX ANCHOR SPACING (IN)	JAMBS MAX ANCHOR SPACING (IN)	MAX PRESSURE (PSF)	HEAD/SILL MAX ANCHOR SPACING (IN)	JAMBS MAX ANCHOR SPACING (IN)	MAX PRESSURE (PSF)	HEAD/SILL MAX ANCHOR SPACING (IN)	JAMBS MAX ANCHOR SPACING (IN)	MAX PRESSURE (PSF)	HEAD/SILL MAX ANCHOR SPACING (IN)	JAMBS MAX ANCHOR SPACING (IN)	MAX PRESSURE (PSF)	HEAD/SILL MAX ANCHOR SPACING (IN)	JAMBS MAX ANCHOR SPACING (IN)	MAX PRESSURE (PSF)	HEAD/SILL MAX ANCHOR SPACING (IN)	JAMBS MAX ANCHOR SPACING (IN)
36	24	100	12'' O.C.	18'' O.C.	100	12'' O.C.	18'' O.C.	100	12'' O.C.	18'' O.C.	100	12'' O.C.	18'' O.C.	100	12'' O.C.	18'' O.C.	100	12'' O.C.	18'' O.C.	100	12'' O.C.	18'' O.C.
	30	100	15'' O.C.	18'' O.C.	100	15'' O.C.	18'' O.C.	100	15'' O.C.	18'' O.C.	100	15'' O.C.	18'' O.C.	100	15'' O.C.	18'' O.C.	100	15'' O.C.	18'' O.C.	100	15'' O.C.	18'' O.C.
	36	100	18'' O.C.	18'' O.C.	100	18'' O.C.	18'' O.C.	100	18'' O.C.	18'' O.C.	100	18'' O.C.	18'' O.C.	100	18'' O.C.	18'' O.C.	100	18'' O.C.	18'' O.C.	100	18'' O.C.	18'' O.C.
	42	100	21'' O.C.	18'' O.C.	100	21'' O.C.	18'' O.C.	100	21'' O.C.	18'' O.C.	100	21'' O.C.	18'' O.C.	100	21'' O.C.	18'' O.C.	100	21'' O.C.	18'' O.C.	100	21'' O.C.	18'' O.C.
	48	100	24'' O.C.	18'' O.C.	100	24'' O.C.	18'' O.C.	100	24'' O.C.	18'' O.C.	100	24'' O.C.	18'' O.C.	100	24'' O.C.	18'' O.C.	100	24'' O.C.	18'' O.C.	100	24'' O.C.	18'' O.C.
	54	100	27'' O.C.	18'' O.C.	100	27'' O.C.	18'' O.C.	100	27'' O.C.	18'' O.C.	100	27'' O.C.	18'' O.C.	100	27'' O.C.	18'' O.C.	100	27'' O.C.	18'' O.C.	100	27'' O.C.	18'' O.C.
	60	100	30'' O.C.	18'' O.C.	100	30'' O.C.	18'' O.C.	100	30'' O.C.	18'' O.C.	100	30'' O.C.	18'' O.C.	100	30'' O.C.	18'' O.C.	100	30'' O.C.	18'' O.C.	100	30'' O.C.	18'' O.C.
	66	100	33'' O.C.	18'' O.C.	100	33'' O.C.	18'' O.C.	100	33'' O.C.	18'' O.C.	100	33'' O.C.	18'' O.C.	100	33'' O.C.	18'' O.C.	100	33'' O.C.	18'' O.C.	100	33'' O.C.	18'' O.C.
	72	100	36'' O.C.	18'' O.C.	100	36'' O.C.	18'' O.C.	100	36'' O.C.	18'' O.C.	100	36'' O.C.	18'' O.C.	100	36'' O.C.	18'' O.C.	100	36'' O.C.	18'' O.C.	100	36'' O.C.	18'' O.C.
	78	100	39'' O.C.	18'' O.C.	100	39'' O.C.	18'' O.C.	100	39'' O.C.	18'' O.C.	100	39'' O.C.	18'' O.C.	100	39'' O.C.	18'' O.C.	100	39'' O.C.	18'' O.C.	100	39'' O.C.	18'' O.C.
48	24	100	12'' O.C.	24'' O.C.	100	12'' O.C.	24'' O.C.	100	12'' O.C.	24'' O.C.	100	12'' O.C.	24'' O.C.	100	12'' O.C.	24'' O.C.	100	12'' O.C.	24'' O.C.	100	12'' O.C.	24'' O.C.
	30	100	15'' O.C.	24'' O.C.	100	15'' O.C.	24'' O.C.	100	15'' O.C.	24'' O.C.	100	15'' O.C.	24'' O.C.	100	15'' O.C.	24'' O.C.	100	15'' O.C.	24'' O.C.	100	15'' O.C.	24'' O.C.
	36	100	18'' O.C.	24'' O.C.	100	18'' O.C.	24'' O.C.	100	18'' O.C.	24'' O.C.	100	18'' O.C.	24'' O.C.	100	18'' O.C.	24'' O.C.	100	18'' O.C.	24'' O.C.	100	18'' O.C.	24'' O.C.
	42	100	21'' O.C.	24'' O.C.	100	21'' O.C.	24'' O.C.	100	21'' O.C.	24'' O.C.	100	21'' O.C.	24'' O.C.	100	21'' O.C.	24'' O.C.	100	21'' O.C.	24'' O.C.	100	21'' O.C.	24'' O.C.
	48	100	24'' O.C.	24'' O.C.	100	24'' O.C.	24'' O.C.	100	24'' O.C.	24'' O.C.	100	24'' O.C.	24'' O.C.	100	24'' O.C.	24'' O.C.	100	24'' O.C.	24'' O.C.	100	24'' O.C.	24'' O.C.
	54	100	27'' O.C.	24'' O.C.	100	27'' O.C.	24'' O.C.	100	27'' O.C.	24'' O.C.	100	27'' O.C.	24'' O.C.	100	27'' O.C.	24'' O.C.	100	27'' O.C.	24'' O.C.	100	27'' O.C.	24'' O.C.
	60	100	30'' O.C.	24'' O.C.	100	30'' O.C.	24'' O.C.	100	30'' O.C.	24'' O.C.	100	30'' O.C.	24'' O.C.	100	30'' O.C.	24'' O.C.	100	30'' O.C.	24'' O.C.	100	30'' O.C.	24'' O.C.
	66	100	33'' O.C.	24'' O.C.	100	33'' O.C.	24'' O.C.	100	33'' O.C.	24'' O.C.	100	33'' O.C.	24'' O.C.	100	33'' O.C.	24'' O.C.	100	33'' O.C.	24'' O.C.	100	33'' O.C.	24'' O.C.
	72	100	36'' O.C.	24'' O.C.	100	36'' O.C.	24'' O.C.	100	36'' O.C.	24'' O.C.	100	36'' O.C.	24'' O.C.	100	36'' O.C.	24'' O.C.	100	36'' O.C.	24'' O.C.	100	36'' O.C.	24'' O.C.
	78	100	39'' O.C.	24'' O.C.	100	39'' O.C.	24'' O.C.	100	39'' O.C.	24'' O.C.	100	39'' O.C.	24'' O.C.	100	39'' O.C.	24'' O.C.	100	39'' O.C.	24'' O.C.	100	39'' O.C.	24'' O.C.
60	24	100	12'' O.C.	30'' O.C.	100	12'' O.C.	30'' O.C.	100	12'' O.C.	30'' O.C.	100	12'' O.C.	30'' O.C.	100	12'' O.C.	30'' O.C.	100	12'' O.C.	30'' O.C.	100	12'' O.C.	30'' O.C.
	30	100	15'' O.C.	30'' O.C.	100	15'' O.C.	30'' O.C.	100	15'' O.C.	30'' O.C.	100	15'' O.C.	30'' O.C.	100	15'' O.C.	30'' O.C.	100	15'' O.C.	30'' O.C.	100	15'' O.C.	30'' O.C.
	36	100	18'' O.C.	30'' O.C.	100	18'' O.C.	30'' O.C.	100	18'' O.C.	30'' O.C.	100	18'' O.C.	30'' O.C.	100	18'' O.C.	30'' O.C.	100	18'' O.C.	30'' O.C.	100	18'' O.C.	30'' O.C.
	42	100	21'' O.C.	30'' O.C.	100	21'' O.C.	30'' O.C.	100	21'' O.C.	30'' O.C.	100	21'' O.C.	30'' O.C.	100	21'' O.C.	30'' O.C.	100	21'' O.C.	30'' O.C.	100	21'' O.C.	30'' O.C.
	48	100	24'' O.C.	30'' O.C.	100	24'' O.C.	30'' O.C.	100	24'' O.C.	30'' O.C.	100	24'' O.C.	30'' O.C.	100	24'' O.C.	30'' O.C.	100	24'' O.C.	30'' O.C.	100	24'' O.C.	30'' O.C.
	54	100	27'' O.C.	30'' O.C.	100	27'' O.C.	30'' O.C.	100	27'' O.C.	30'' O.C.	100	27'' O.C.	30'' O.C.	100	27'' O.C.	30'' O.C.	100	27'' O.C.	30'' O.C.	100	27'' O.C.	30'' O.C.
	60	100	30'' O.C.	30'' O.C.	100	30'' O.C.	30'' O.C.	100	30'' O.C.	30'' O.C.	100	30'' O.C.	30'' O.C.	100	30'' O.C.	30'' O.C.	100	30'' O.C.	30'' O.C.	100	30'' O.C.	30'' O.C.
	66	100	33'' O.C.	30'' O.C.	100	33'' O.C.	30'' O.C.	100	33'' O.C.	30'' O.C.	100	33'' O.C.	30'' O.C.	100	33'' O.C.	30'' O.C.	100	33'' O.C.	30'' O.C.	100	33'' O.C.	30'' O.C.
	72	100	36'' O.C.	30'' O.C.	100	36'' O.C.	30'' O.C.	100	36'' O.C.	30'' O.C.	100	36'' O.C.	30'' O.C.	100	36'' O.C.	30'' O.C.	100	36'' O.C.	30'' O.C.	100	36'' O.C.	30'' O.C.
	78	100	39'' O.C.	30'' O.C.	100	39'' O.C.	30'' O.C.	100	39'' O.C.	30'' O.C.	100	39'' O.C.	30'' O.C.	100	39'' O.C.	30'' O.C.	100	39'' O.C.	30'' O.C.	100	39'' O.C.	30'' O.C.
72	24	100	12'' O.C.	36'' O.C.	100	12'' O.C.	36'' O.C.	100	12'' O.C.	36'' O.C.	100	12'' O.C.	36'' O.C.	100	12'' O.C.	36'' O.C.	100	12'' O.C.	36'' O.C.	100	12'' O.C.	36'' O.C.
	30	100	15'' O.C.	36'' O.C.	100	15'' O.C.	36'' O.C.	100	15'' O.C.	36'' O.C.	100	15'' O.C.	36'' O.C.	100	15'' O.C.	36'' O.C.	100	15'' O.C.	36'' O.C.	100	15'' O.C.	36'' O.C.
	36	100	18'' O.C.	36'' O.C.	100	18'' O.C.	36'' O.C.	100	18'' O.C.	36'' O.C.	100	18'' O.C.	36'' O.C.	100	18'' O.C.	36'' O.C.	100	18'' O.C.	36'' O.C.	100	18'' O.C.	36'' O.C.
	42	100	21'' O.C.	36'' O.C.	100	21'' O.C.	36'' O.C.	100	21'' O.C.	36'' O.C.	100	21'' O.C.	36'' O.C.	100	21'' O.C.	36'' O.C.	100	21'' O.C.	36'' O.C.	100	21'' O.C.	36'' O.C.
	48	100	24'' O.C.	36'' O.C.	100	24'' O.C.	36'' O.C.	100	24'' O.C.	36'' O.C.	100	24'' O.C.	36'' O.C.	100	24'' O.C.	36'' O.C.	100	24'' O.C.	36'' O.C.	100	24'' O.C.	36'' O.C.
	54	100	27'' O.C.	36'' O.C.	100	27'' O.C.	36'' O.C.	100	27'' O.C.	36'' O.C.	100	27'' O.C.	36'' O.C.	100	27'' O.C.	36'' O.C.	100	27'' O.C.	36'' O.C.	100	27'' O.C.	36'' O.C.
	60	74	30'' O.C.	36'' O.C.	100	30'' O.C.	36'' O.C.	100	30'' O.C.	36'' O.C.	100	30'' O.C.	36'' O.C.	100	30'' O.C.	36'' O.C.	100	30'' O.C.	36'' O.C.	100	30'' O.C.	36'' O.C.
	66	72	33'' O.C.	36'' O.C.	100	33'' O.C.	36'' O.C.	100	33'' O.C.	36'' O.C.	100	33'' O.C.	36'' O.C.	100	33'' O.C.	36'' O.C.	100	33'' O.C.	36'' O.C.	100	33'' O.C.	36'' O.C.
	72	72	36'' O.C.	36'' O.C.	100	36'' O.C.	36'' O.C.	100	36'' O.C.	36'' O.C.	100	36'' O.C.	36'' O.C.	100	36'' O.C.	36'' O.C.	100	36'' O.C.	36'' O.C.	100	36'' O.C.	36'' O.C.
	78	72	39'' O.C.	36'' O.C.	100	39'' O.C.	36'' O.C.	100	39'' O.C.	36'' O.C.	100	39'' O.C.	36'' O.C.	100	39'' O.C.	36'' O.C.	100	39'' O.C.	36'' O.C.	100	39'' O.C.	36'' O.C.

FRANK BENNARDO, P.E.
PE# 0046549 CA 9885
09/01/2021

FL#29520.4

ENGINEERING EXPRESS®
POSTAL ADDRESS:
401 W. ATLANTIC AVE. R10 #219
DELRAY BEACH, FL 33444
ENGINEERINGEXPRESS.COM

CRAWFORD TRACEY CORPORATION
3301 S.W. 13th DRIVE
DEERFIELD BEACH, FL, 334422-8101
Phn. (954) 698-6888

PRO-TECH 45SG ALUMINUM CURTAINWALL SYSTEM
FLORIDA STATE APPROVAL

REMARKS	DRWN	CHKD	DATE
FBC 2020 UPDATE	JEM	AJP	10/19/20
-	-	-	-
-	-	-	-
-	-	-	-
-	-	-	-

COPYRIGHT ENGINEERING EXPRESS®

20-32267

SCALE: NTS UNLESS NOTED

MAXIMUM ALLOWABLE STRESS DESIGN PRESSURE RATING FOR HEAD, SILL AND JAMB CONNECTIONS-ANCHOR TYPE A "MAX SHIM = 1/4"

FRAME HEIGHT (H)	TRIBUTARY (W)	TOTAL NUMBER OF ANCHORS AT THE CLUSTER-ANCHOR TYPE A																				
		2			4			6			8			10			12			16		
		MAX PRESSURE (PSF)	HEAD/SILL MAX ANCHOR SPACING (IN)	JAMBS MAX ANCHOR SPACING (IN)	MAX PRESSURE (PSF)	HEAD/SILL MAX ANCHOR SPACING (IN)	JAMBS MAX ANCHOR SPACING (IN)	MAX PRESSURE (PSF)	HEAD/SILL MAX ANCHOR SPACING (IN)	JAMBS MAX ANCHOR SPACING (IN)	MAX PRESSURE (PSF)	HEAD/SILL MAX ANCHOR SPACING (IN)	JAMBS MAX ANCHOR SPACING (IN)	MAX PRESSURE (PSF)	HEAD/SILL MAX ANCHOR SPACING (IN)	JAMBS MAX ANCHOR SPACING (IN)	MAX PRESSURE (PSF)	HEAD/SILL MAX ANCHOR SPACING (IN)	JAMBS MAX ANCHOR SPACING (IN)	MAX PRESSURE (PSF)	HEAD/SILL MAX ANCHOR SPACING (IN)	JAMBS MAX ANCHOR SPACING (IN)
84	24	100	12'' O.C.	42'' O.C.	100	12'' O.C.	42'' O.C.	100	12'' O.C.	42'' O.C.	100	12'' O.C.	42'' O.C.	100	12'' O.C.	42'' O.C.	100	12'' O.C.	42'' O.C.	100	12'' O.C.	42'' O.C.
	30	100	15'' O.C.	42'' O.C.	100	15'' O.C.	42'' O.C.	100	15'' O.C.	42'' O.C.	100	15'' O.C.	42'' O.C.	100	15'' O.C.	42'' O.C.	100	15'' O.C.	42'' O.C.	100	15'' O.C.	42'' O.C.
	36	100	18'' O.C.	42'' O.C.	100	18'' O.C.	42'' O.C.	100	18'' O.C.	42'' O.C.	100	18'' O.C.	42'' O.C.	100	18'' O.C.	42'' O.C.	100	18'' O.C.	42'' O.C.	100	18'' O.C.	42'' O.C.
	42	100	21'' O.C.	42'' O.C.	100	21'' O.C.	42'' O.C.	100	21'' O.C.	42'' O.C.	100	21'' O.C.	42'' O.C.	100	21'' O.C.	42'' O.C.	100	21'' O.C.	42'' O.C.	100	21'' O.C.	42'' O.C.
	48	100	24'' O.C.	42'' O.C.	100	24'' O.C.	42'' O.C.	100	24'' O.C.	42'' O.C.	100	24'' O.C.	42'' O.C.	100	24'' O.C.	42'' O.C.	100	24'' O.C.	42'' O.C.	100	24'' O.C.	42'' O.C.
	54	100	27'' O.C.	42'' O.C.	100	27'' O.C.	42'' O.C.	100	27'' O.C.	42'' O.C.	100	27'' O.C.	42'' O.C.	100	27'' O.C.	42'' O.C.	100	27'' O.C.	42'' O.C.	100	27'' O.C.	42'' O.C.
	60	57	30'' O.C.	42'' O.C.	100	30'' O.C.	42'' O.C.	100	30'' O.C.	42'' O.C.	100	30'' O.C.	42'' O.C.	100	30'' O.C.	42'' O.C.	100	30'' O.C.	42'' O.C.	100	30'' O.C.	42'' O.C.
	66	55	33'' O.C.	42'' O.C.	100	33'' O.C.	42'' O.C.	100	33'' O.C.	42'' O.C.	100	33'' O.C.	42'' O.C.	100	33'' O.C.	42'' O.C.	100	33'' O.C.	42'' O.C.	100	33'' O.C.	42'' O.C.
	72	54	36'' O.C.	42'' O.C.	100	36'' O.C.	42'' O.C.	100	36'' O.C.	42'' O.C.	100	36'' O.C.	42'' O.C.	100	36'' O.C.	42'' O.C.	100	36'' O.C.	42'' O.C.	100	36'' O.C.	42'' O.C.
	78	53	39'' O.C.	42'' O.C.	100	39'' O.C.	42'' O.C.	100	39'' O.C.	42'' O.C.	100	39'' O.C.	42'' O.C.	100	39'' O.C.	42'' O.C.	100	39'' O.C.	42'' O.C.	100	39'' O.C.	42'' O.C.
96	24	100	12'' O.C.	48'' O.C.	100	12'' O.C.	48'' O.C.	100	12'' O.C.	48'' O.C.	100	12'' O.C.	48'' O.C.	100	12'' O.C.	48'' O.C.	100	12'' O.C.	48'' O.C.	100	12'' O.C.	48'' O.C.
	30	100	15'' O.C.	48'' O.C.	100	15'' O.C.	48'' O.C.	100	15'' O.C.	48'' O.C.	100	15'' O.C.	48'' O.C.	100	15'' O.C.	48'' O.C.	100	15'' O.C.	48'' O.C.	100	15'' O.C.	48'' O.C.
	36	100	18'' O.C.	48'' O.C.	100	18'' O.C.	48'' O.C.	100	18'' O.C.	48'' O.C.	100	18'' O.C.	48'' O.C.	100	18'' O.C.	48'' O.C.	100	18'' O.C.	48'' O.C.	100	18'' O.C.	48'' O.C.
	42	100	21'' O.C.	48'' O.C.	100	21'' O.C.	48'' O.C.	100	21'' O.C.	48'' O.C.	100	21'' O.C.	48'' O.C.	100	21'' O.C.	48'' O.C.	100	21'' O.C.	48'' O.C.	100	21'' O.C.	48'' O.C.
	48	100	24'' O.C.	48'' O.C.	100	24'' O.C.	48'' O.C.	100	24'' O.C.	48'' O.C.	100	24'' O.C.	48'' O.C.	100	24'' O.C.	48'' O.C.	100	24'' O.C.	48'' O.C.	100	24'' O.C.	48'' O.C.
	54	100	27'' O.C.	48'' O.C.	100	27'' O.C.	48'' O.C.	100	27'' O.C.	48'' O.C.	100	27'' O.C.	48'' O.C.	100	27'' O.C.	48'' O.C.	100	27'' O.C.	48'' O.C.	100	27'' O.C.	48'' O.C.
	60	47	30'' O.C.	48'' O.C.	94	30'' O.C.	48'' O.C.	100	30'' O.C.	32'' O.C.	100	30'' O.C.	32'' O.C.	100	30'' O.C.	32'' O.C.	100	30'' O.C.	32'' O.C.	100	30'' O.C.	32'' O.C.
	66	45	33'' O.C.	48'' O.C.	90	33'' O.C.	48'' O.C.	100	33'' O.C.	32'' O.C.	100	33'' O.C.	32'' O.C.	100	33'' O.C.	32'' O.C.	100	33'' O.C.	32'' O.C.	100	33'' O.C.	32'' O.C.
	72	43	36'' O.C.	48'' O.C.	86	36'' O.C.	48'' O.C.	100	36'' O.C.	32'' O.C.	100	36'' O.C.	32'' O.C.	100	36'' O.C.	32'' O.C.	100	36'' O.C.	32'' O.C.	100	36'' O.C.	32'' O.C.
	78	42	39'' O.C.	48'' O.C.	84	39'' O.C.	48'' O.C.	100	39'' O.C.	32'' O.C.	100	39'' O.C.	32'' O.C.	100	39'' O.C.	32'' O.C.	100	39'' O.C.	32'' O.C.	100	39'' O.C.	32'' O.C.
108	24	100	12'' O.C.	54'' O.C.	100	12'' O.C.	54'' O.C.	100	12'' O.C.	54'' O.C.	100	12'' O.C.	54'' O.C.	100	12'' O.C.	54'' O.C.	100	12'' O.C.	54'' O.C.	100	12'' O.C.	54'' O.C.
	30	100	15'' O.C.	54'' O.C.	100	15'' O.C.	54'' O.C.	100	15'' O.C.	54'' O.C.	100	15'' O.C.	54'' O.C.	100	15'' O.C.	54'' O.C.	100	15'' O.C.	54'' O.C.	100	15'' O.C.	54'' O.C.
	36	100	18'' O.C.	54'' O.C.	100	18'' O.C.	54'' O.C.	100	18'' O.C.	54'' O.C.	100	18'' O.C.	54'' O.C.	100	18'' O.C.	54'' O.C.	100	18'' O.C.	54'' O.C.	100	18'' O.C.	54'' O.C.
	42	100	21'' O.C.	54'' O.C.	100	21'' O.C.	54'' O.C.	100	21'' O.C.	54'' O.C.	100	21'' O.C.	54'' O.C.	100	21'' O.C.	54'' O.C.	100	21'' O.C.	54'' O.C.	100	21'' O.C.	54'' O.C.
	48	92	24'' O.C.	54'' O.C.	100	24'' O.C.	54'' O.C.	100	24'' O.C.	54'' O.C.	100	24'' O.C.	54'' O.C.	100	24'' O.C.	54'' O.C.	100	24'' O.C.	54'' O.C.	100	24'' O.C.	54'' O.C.
	54	85	27'' O.C.	54'' O.C.	100	27'' O.C.	54'' O.C.	100	27'' O.C.	54'' O.C.	100	27'' O.C.	54'' O.C.	100	27'' O.C.	54'' O.C.	100	27'' O.C.	54'' O.C.	100	27'' O.C.	54'' O.C.
	60	40	30'' O.C.	54'' O.C.	80	30'' O.C.	54'' O.C.	100	30'' O.C.	36'' O.C.	100	30'' O.C.	36'' O.C.	100	30'' O.C.	36'' O.C.	100	30'' O.C.	36'' O.C.	100	30'' O.C.	36'' O.C.
	66	37	33'' O.C.	54'' O.C.	75	33'' O.C.	54'' O.C.	100	33'' O.C.	36'' O.C.	100	33'' O.C.	36'' O.C.	100	33'' O.C.	36'' O.C.	100	33'' O.C.	36'' O.C.	100	33'' O.C.	36'' O.C.
	72	36	36'' O.C.	54'' O.C.	72	36'' O.C.	54'' O.C.	100	36'' O.C.	36'' O.C.	100	36'' O.C.	36'' O.C.	100	36'' O.C.	36'' O.C.	100	36'' O.C.	36'' O.C.	100	36'' O.C.	36'' O.C.
	78	34	39'' O.C.	54'' O.C.	69	39'' O.C.	54'' O.C.	100	39'' O.C.	36'' O.C.	100	39'' O.C.	36'' O.C.	100	39'' O.C.	36'' O.C.	100	39'' O.C.	36'' O.C.	100	39'' O.C.	36'' O.C.
120	24	100	12'' O.C.	60'' O.C.	100	12'' O.C.	60'' O.C.	100	12'' O.C.	60'' O.C.	100	12'' O.C.	60'' O.C.	100	12'' O.C.	60'' O.C.	100	12'' O.C.	60'' O.C.	100	12'' O.C.	60'' O.C.
	30	100	15'' O.C.	60'' O.C.	100	15'' O.C.	60'' O.C.	100	15'' O.C.	60'' O.C.	100	15'' O.C.	60'' O.C.	100	15'' O.C.	60'' O.C.	100	15'' O.C.	60'' O.C.	100	15'' O.C.	60'' O.C.
	36	100	18'' O.C.	60'' O.C.	100	18'' O.C.	60'' O.C.	100	18'' O.C.	60'' O.C.	100	18'' O.C.	60'' O.C.	100	18'' O.C.	60'' O.C.	100	18'' O.C.	60'' O.C.	100	18'' O.C.	60'' O.C.
	42	90	21'' O.C.	60'' O.C.	100	21'' O.C.	60'' O.C.	100	21'' O.C.	60'' O.C.	100	21'' O.C.	60'' O.C.	100	21'' O.C.	60'' O.C.	100	21'' O.C.	60'' O.C.	100	21'' O.C.	60'' O.C.
	48	81	24'' O.C.	60'' O.C.	100	24'' O.C.	60'' O.C.	100	24'' O.C.	60'' O.C.	100	24'' O.C.	60'' O.C.	100	24'' O.C.	60'' O.C.	100	24'' O.C.	60'' O.C.	100	24'' O.C.	60'' O.C.
	54	74	27'' O.C.	60'' O.C.	100	27'' O.C.	60'' O.C.	100	27'' O.C.	60'' O.C.	100	27'' O.C.	60'' O.C.	100	27'' O.C.	60'' O.C.	100	27'' O.C.	60'' O.C.	100	27'' O.C.	60'' O.C.
	60	34	30'' O.C.	60'' O.C.	69	30'' O.C.	60'' O.C.	100	30'' O.C.	40'' O.C.	100	30'' O.C.	40'' O.C.	100	30'' O.C.	40'' O.C.	100	30'' O.C.	40'' O.C.	100	30'' O.C.	40'' O.C.
	66	32	33'' O.C.	60'' O.C.	65	33'' O.C.	60'' O.C.	97	33'' O.C.	40'' O.C.	100	33'' O.C.	30'' O.C.	100	33'' O.C.	30'' O.C.	100	33'' O.C.	30'' O.C.	100	33'' O.C.	30'' O.C.
	72	30	36'' O.C.	60'' O.C.	61	36'' O.C.	60'' O.C.	92	36'' O.C.	40'' O.C.	100	36'' O.C.	30'' O.C.	100	36'' O.C.	30'' O.C.	100	36'' O.C.	30'' O.C.	100	36'' O.C.	30'' O.C.
	78	29	39'' O.C.	60'' O.C.	59	39'' O.C.	60'' O.C.	88	39'' O.C.	40'' O.C.	100	39'' O.C.	30'' O.C.	100	39'' O.C.	30'' O.C.	100	39'' O.C.	30'' O.C.	100	39'' O.C.	30'' O.C.

FRANK BENNARDO, P.E.
PE# 0046549 CA 9885

09/01/2021

FL#29520.4

ENGINEERING EXPRESS®
POSTAL ADDRESS:
401 W. ATLANTIC AVE. R10 #219
DELRAY BEACH, FL 33444
ENGINEERINGEXPRESS.COM

CRAWFORD TRACEY CORPORATION
3301 S.W. 13th DRIVE
DEERFIELD BEACH, FL, 334422-8101
Phn. (954) 698-6888

PRO-TECH 455G ALUMINUM CURTAINWALL SYSTEM
FLORIDA STATE APPROVAL

REMARKS	DRWN	CHKD	DATE
FBC 2020 UPDATE	JEM	AJP	10/19/20

COPYRIGHT ENGINEERING EXPRESS®

20-32267

SCALE: NTS UNLESS NOTED

MAXIMUM ALLOWABLE STRESS DESIGN PRESSURE RATING FOR HEAD, SILL AND JAMB CONNECTIONS-ANCHOR TYPE B "MAX SHIM = 1/4"

FRAME HEIGHT (H)	TRIBUTARY (W)	TOTAL NUMBER OF ANCHORS AT THE CLUSTER-ANCHOR TYPE B																				
		2			4			6			8			10			12			16		
		MAX PRESSURE (PSF)	HEAD/SILL MAX ANCHOR SPACING (IN)	JAMBS MAX ANCHOR SPACING (IN)	MAX PRESSURE (PSF)	HEAD/SILL MAX ANCHOR SPACING (IN)	JAMBS MAX ANCHOR SPACING (IN)	MAX PRESSURE (PSF)	HEAD/SILL MAX ANCHOR SPACING (IN)	JAMBS MAX ANCHOR SPACING (IN)	MAX PRESSURE (PSF)	HEAD/SILL MAX ANCHOR SPACING (IN)	JAMBS MAX ANCHOR SPACING (IN)	MAX PRESSURE (PSF)	HEAD/SILL MAX ANCHOR SPACING (IN)	JAMBS MAX ANCHOR SPACING (IN)	MAX PRESSURE (PSF)	HEAD/SILL MAX ANCHOR SPACING (IN)	JAMBS MAX ANCHOR SPACING (IN)	MAX PRESSURE (PSF)	HEAD/SILL MAX ANCHOR SPACING (IN)	JAMBS MAX ANCHOR SPACING (IN)
36	24	100	12" O.C.	18" O.C.	100	12" O.C.	18" O.C.	100	12" O.C.	18" O.C.	100	12" O.C.	18" O.C.	100	12" O.C.	18" O.C.	100	12" O.C.	18" O.C.	100	12" O.C.	18" O.C.
	30	100	15" O.C.	18" O.C.	100	15" O.C.	18" O.C.	100	15" O.C.	18" O.C.	100	15" O.C.	18" O.C.	100	15" O.C.	18" O.C.	100	15" O.C.	18" O.C.	100	15" O.C.	18" O.C.
	36	100	18" O.C.	18" O.C.	100	18" O.C.	18" O.C.	100	18" O.C.	18" O.C.	100	18" O.C.	18" O.C.	100	18" O.C.	18" O.C.	100	18" O.C.	18" O.C.	100	18" O.C.	18" O.C.
	42	100	21" O.C.	18" O.C.	100	21" O.C.	18" O.C.	100	21" O.C.	18" O.C.	100	21" O.C.	18" O.C.	100	21" O.C.	18" O.C.	100	21" O.C.	18" O.C.	100	21" O.C.	18" O.C.
	48	100	24" O.C.	18" O.C.	100	24" O.C.	18" O.C.	100	24" O.C.	18" O.C.	100	24" O.C.	18" O.C.	100	24" O.C.	18" O.C.	100	24" O.C.	18" O.C.	100	24" O.C.	18" O.C.
	54	100	27" O.C.	18" O.C.	100	27" O.C.	18" O.C.	100	27" O.C.	18" O.C.	100	27" O.C.	18" O.C.	100	27" O.C.	18" O.C.	100	27" O.C.	18" O.C.	100	27" O.C.	18" O.C.
	60	100	30" O.C.	18" O.C.	100	30" O.C.	18" O.C.	100	30" O.C.	18" O.C.	100	30" O.C.	18" O.C.	100	30" O.C.	18" O.C.	100	30" O.C.	18" O.C.	100	30" O.C.	18" O.C.
	66	100	33" O.C.	18" O.C.	100	33" O.C.	18" O.C.	100	33" O.C.	18" O.C.	100	33" O.C.	18" O.C.	100	33" O.C.	18" O.C.	100	33" O.C.	18" O.C.	100	33" O.C.	18" O.C.
	72	100	36" O.C.	18" O.C.	100	36" O.C.	18" O.C.	100	36" O.C.	18" O.C.	100	36" O.C.	18" O.C.	100	36" O.C.	18" O.C.	100	36" O.C.	18" O.C.	100	36" O.C.	18" O.C.
	78	100	39" O.C.	18" O.C.	100	39" O.C.	18" O.C.	100	39" O.C.	18" O.C.	100	39" O.C.	18" O.C.	100	39" O.C.	18" O.C.	100	39" O.C.	18" O.C.	100	39" O.C.	18" O.C.
48	24	100	12" O.C.	24" O.C.	100	12" O.C.	24" O.C.	100	12" O.C.	24" O.C.	100	12" O.C.	24" O.C.	100	12" O.C.	24" O.C.	100	12" O.C.	24" O.C.	100	12" O.C.	24" O.C.
	30	100	15" O.C.	24" O.C.	100	15" O.C.	24" O.C.	100	15" O.C.	24" O.C.	100	15" O.C.	24" O.C.	100	15" O.C.	24" O.C.	100	15" O.C.	24" O.C.	100	15" O.C.	24" O.C.
	36	100	18" O.C.	24" O.C.	100	18" O.C.	24" O.C.	100	18" O.C.	24" O.C.	100	18" O.C.	24" O.C.	100	18" O.C.	24" O.C.	100	18" O.C.	24" O.C.	100	18" O.C.	24" O.C.
	42	100	21" O.C.	24" O.C.	100	21" O.C.	24" O.C.	100	21" O.C.	24" O.C.	100	21" O.C.	24" O.C.	100	21" O.C.	24" O.C.	100	21" O.C.	24" O.C.	100	21" O.C.	24" O.C.
	48	100	24" O.C.	24" O.C.	100	24" O.C.	24" O.C.	100	24" O.C.	24" O.C.	100	24" O.C.	24" O.C.	100	24" O.C.	24" O.C.	100	24" O.C.	24" O.C.	100	24" O.C.	24" O.C.
	54	100	27" O.C.	24" O.C.	100	27" O.C.	24" O.C.	100	27" O.C.	24" O.C.	100	27" O.C.	24" O.C.	100	27" O.C.	24" O.C.	100	27" O.C.	24" O.C.	100	27" O.C.	24" O.C.
	60	100	30" O.C.	24" O.C.	100	30" O.C.	24" O.C.	100	30" O.C.	24" O.C.	100	30" O.C.	24" O.C.	100	30" O.C.	24" O.C.	100	30" O.C.	24" O.C.	100	30" O.C.	24" O.C.
	66	100	33" O.C.	24" O.C.	100	33" O.C.	24" O.C.	100	33" O.C.	24" O.C.	100	33" O.C.	24" O.C.	100	33" O.C.	24" O.C.	100	33" O.C.	24" O.C.	100	33" O.C.	24" O.C.
	72	100	36" O.C.	24" O.C.	100	36" O.C.	24" O.C.	100	36" O.C.	24" O.C.	100	36" O.C.	24" O.C.	100	36" O.C.	24" O.C.	100	36" O.C.	24" O.C.	100	36" O.C.	24" O.C.
	78	100	39" O.C.	24" O.C.	100	39" O.C.	24" O.C.	100	39" O.C.	24" O.C.	100	39" O.C.	24" O.C.	100	39" O.C.	24" O.C.	100	39" O.C.	24" O.C.	100	39" O.C.	24" O.C.
60	24	100	12" O.C.	30" O.C.	100	12" O.C.	30" O.C.	100	12" O.C.	30" O.C.	100	12" O.C.	30" O.C.	100	12" O.C.	30" O.C.	100	12" O.C.	30" O.C.	100	12" O.C.	30" O.C.
	30	100	15" O.C.	30" O.C.	100	15" O.C.	30" O.C.	100	15" O.C.	30" O.C.	100	15" O.C.	30" O.C.	100	15" O.C.	30" O.C.	100	15" O.C.	30" O.C.	100	15" O.C.	30" O.C.
	36	100	18" O.C.	30" O.C.	100	18" O.C.	30" O.C.	100	18" O.C.	30" O.C.	100	18" O.C.	30" O.C.	100	18" O.C.	30" O.C.	100	18" O.C.	30" O.C.	100	18" O.C.	30" O.C.
	42	100	21" O.C.	30" O.C.	100	21" O.C.	30" O.C.	100	21" O.C.	30" O.C.	100	21" O.C.	30" O.C.	100	21" O.C.	30" O.C.	100	21" O.C.	30" O.C.	100	21" O.C.	30" O.C.
	48	100	24" O.C.	30" O.C.	100	24" O.C.	30" O.C.	100	24" O.C.	30" O.C.	100	24" O.C.	30" O.C.	100	24" O.C.	30" O.C.	100	24" O.C.	30" O.C.	100	24" O.C.	30" O.C.
	54	100	27" O.C.	30" O.C.	100	27" O.C.	30" O.C.	100	27" O.C.	30" O.C.	100	27" O.C.	30" O.C.	100	27" O.C.	30" O.C.	100	27" O.C.	30" O.C.	100	27" O.C.	30" O.C.
	60	93	30" O.C.	30" O.C.	100	30" O.C.	30" O.C.	100	30" O.C.	30" O.C.	100	30" O.C.	30" O.C.	100	30" O.C.	30" O.C.	100	30" O.C.	30" O.C.	100	30" O.C.	30" O.C.
	66	93	33" O.C.	30" O.C.	100	33" O.C.	30" O.C.	100	33" O.C.	30" O.C.	100	33" O.C.	30" O.C.	100	33" O.C.	30" O.C.	100	33" O.C.	30" O.C.	100	33" O.C.	30" O.C.
	72	93	36" O.C.	30" O.C.	100	36" O.C.	30" O.C.	100	36" O.C.	30" O.C.	100	36" O.C.	30" O.C.	100	36" O.C.	30" O.C.	100	36" O.C.	30" O.C.	100	36" O.C.	30" O.C.
	78	93	39" O.C.	30" O.C.	100	39" O.C.	30" O.C.	100	39" O.C.	30" O.C.	100	39" O.C.	30" O.C.	100	39" O.C.	30" O.C.	100	39" O.C.	30" O.C.	100	39" O.C.	30" O.C.
72	24	100	12" O.C.	36" O.C.	100	12" O.C.	36" O.C.	100	12" O.C.	36" O.C.	100	12" O.C.	36" O.C.	100	12" O.C.	36" O.C.	100	12" O.C.	36" O.C.	100	12" O.C.	36" O.C.
	30	100	15" O.C.	36" O.C.	100	15" O.C.	36" O.C.	100	15" O.C.	36" O.C.	100	15" O.C.	36" O.C.	100	15" O.C.	36" O.C.	100	15" O.C.	36" O.C.	100	15" O.C.	36" O.C.
	36	100	18" O.C.	36" O.C.	100	18" O.C.	36" O.C.	100	18" O.C.	36" O.C.	100	18" O.C.	36" O.C.	100	18" O.C.	36" O.C.	100	18" O.C.	36" O.C.	100	18" O.C.	36" O.C.
	42	100	21" O.C.	36" O.C.	100	21" O.C.	36" O.C.	100	21" O.C.	36" O.C.	100	21" O.C.	36" O.C.	100	21" O.C.	36" O.C.	100	21" O.C.	36" O.C.	100	21" O.C.	36" O.C.
	48	100	24" O.C.	36" O.C.	100	24" O.C.	36" O.C.	100	24" O.C.	36" O.C.	100	24" O.C.	36" O.C.	100	24" O.C.	36" O.C.	100	24" O.C.	36" O.C.	100	24" O.C.	36" O.C.
	54	100	27" O.C.	36" O.C.	100	27" O.C.	36" O.C.	100	27" O.C.	36" O.C.	100	27" O.C.	36" O.C.	100	27" O.C.	36" O.C.	100	27" O.C.	36" O.C.	100	27" O.C.	36" O.C.
	60	67	30" O.C.	36" O.C.	100	30" O.C.	36" O.C.	100	30" O.C.	36" O.C.	100	30" O.C.	36" O.C.	100	30" O.C.	36" O.C.	100	30" O.C.	36" O.C.	100	30" O.C.	36" O.C.
	66	65	33" O.C.	36" O.C.	100	33" O.C.	36" O.C.	100	33" O.C.	36" O.C.	100	33" O.C.	36" O.C.	100	33" O.C.	36" O.C.	100	33" O.C.	36" O.C.	100	33" O.C.	36" O.C.
	72	65	36" O.C.	36" O.C.	100	36" O.C.	36" O.C.	100	36" O.C.	36" O.C.	100	36" O.C.	36" O.C.	100	36" O.C.	36" O.C.	100	36" O.C.	36" O.C.	100	36" O.C.	36" O.C.
	78	65	39" O.C.	36" O.C.	100	39" O.C.	36" O.C.	100	39" O.C.	36" O.C.	100	39" O.C.	36" O.C.	100	39" O.C.	36" O.C.	100	39" O.C.	36" O.C.	100	39" O.C.	36" O.C.

FRANK BENNARDO, P.E.
PE# 0046549 CA 9885

09/01/2021

FL#29520.4

ENGINEERING EXPRESS®
POSTAL ADDRESS:
401 W. ATLANTIC AVE. R10 #219
DELRAY BEACH, FL 33444
ENGINEERINGEXPRESS.COM

CRAWFORD TRACEY CORPORATION
3301 S.W. 13th DRIVE
DEERFIELD BEACH, FL, 334422-8101
Phn. (954) 698-6888

PRO-TECH 45SG ALUMINUM CURTAINWALL SYSTEM
FLORIDA STATE APPROVAL

REMARKS	DRWN	CHKD	DATE
FBC 2020 UPDATE	JEM	AJP	10/19/20
-	-	-	-
-	-	-	-
-	-	-	-
-	-	-	-

COPYRIGHT ENGINEERING EXPRESS®

20-32267

SCALE: NTS UNLESS NOTED

MAXIMUM ALLOWABLE STRESS DESIGN PRESSURE RATING FOR HEAD, SILL AND JAMB CONNECTIONS-ANCHOR TYPE B "MAX SHIM = 1/4"

FRAME HEIGHT (H)	TRIBUTARY (W)	TOTAL NUMBER OF ANCHORS AT THE CLUSTER-ANCHOR TYPE B																				
		2			4			6			8			10			12			16		
		MAX PRESSURE (PSF)	HEAD/SILL MAX ANCHOR SPACING (IN)	JAMBS MAX ANCHOR SPACING (IN)	MAX PRESSURE (PSF)	HEAD/SILL MAX ANCHOR SPACING (IN)	JAMBS MAX ANCHOR SPACING (IN)	MAX PRESSURE (PSF)	HEAD/SILL MAX ANCHOR SPACING (IN)	JAMBS MAX ANCHOR SPACING (IN)	MAX PRESSURE (PSF)	HEAD/SILL MAX ANCHOR SPACING (IN)	JAMBS MAX ANCHOR SPACING (IN)	MAX PRESSURE (PSF)	HEAD/SILL MAX ANCHOR SPACING (IN)	JAMBS MAX ANCHOR SPACING (IN)	MAX PRESSURE (PSF)	HEAD/SILL MAX ANCHOR SPACING (IN)	JAMBS MAX ANCHOR SPACING (IN)	MAX PRESSURE (PSF)	HEAD/SILL MAX ANCHOR SPACING (IN)	JAMBS MAX ANCHOR SPACING (IN)
84	24	100	12" O.C.	42" O.C.	100	12" O.C.	42" O.C.	100	12" O.C.	42" O.C.	100	12" O.C.	42" O.C.	100	12" O.C.	42" O.C.	100	12" O.C.	42" O.C.	100	12" O.C.	42" O.C.
	30	100	15" O.C.	42" O.C.	100	15" O.C.	42" O.C.	100	15" O.C.	42" O.C.	100	15" O.C.	42" O.C.	100	15" O.C.	42" O.C.	100	15" O.C.	42" O.C.	100	15" O.C.	42" O.C.
	36	100	18" O.C.	42" O.C.	100	18" O.C.	42" O.C.	100	18" O.C.	42" O.C.	100	18" O.C.	42" O.C.	100	18" O.C.	42" O.C.	100	18" O.C.	42" O.C.	100	18" O.C.	42" O.C.
	42	100	21" O.C.	42" O.C.	100	21" O.C.	42" O.C.	100	21" O.C.	42" O.C.	100	21" O.C.	42" O.C.	100	21" O.C.	42" O.C.	100	21" O.C.	42" O.C.	100	21" O.C.	42" O.C.
	48	100	24" O.C.	42" O.C.	100	24" O.C.	42" O.C.	100	24" O.C.	42" O.C.	100	24" O.C.	42" O.C.	100	24" O.C.	42" O.C.	100	24" O.C.	42" O.C.	100	24" O.C.	42" O.C.
	54	100	27" O.C.	42" O.C.	100	27" O.C.	42" O.C.	100	27" O.C.	42" O.C.	100	27" O.C.	42" O.C.	100	27" O.C.	42" O.C.	100	27" O.C.	42" O.C.	100	27" O.C.	42" O.C.
	60	52	30" O.C.	42" O.C.	100	30" O.C.	42" O.C.	100	30" O.C.	42" O.C.	100	30" O.C.	42" O.C.	100	30" O.C.	42" O.C.	100	30" O.C.	42" O.C.	100	30" O.C.	42" O.C.
	66	50	33" O.C.	42" O.C.	100	33" O.C.	42" O.C.	100	33" O.C.	42" O.C.	100	33" O.C.	42" O.C.	100	33" O.C.	42" O.C.	100	33" O.C.	42" O.C.	100	33" O.C.	42" O.C.
	72	48	36" O.C.	42" O.C.	97	36" O.C.	42" O.C.	100	36" O.C.	28" O.C.	100	36" O.C.	28" O.C.	100	36" O.C.	28" O.C.	100	36" O.C.	28" O.C.	100	36" O.C.	28" O.C.
	78	48	39" O.C.	42" O.C.	96	39" O.C.	42" O.C.	100	39" O.C.	28" O.C.	100	39" O.C.	28" O.C.	100	39" O.C.	28" O.C.	100	39" O.C.	28" O.C.	100	39" O.C.	28" O.C.
96	24	100	12" O.C.	48" O.C.	100	12" O.C.	48" O.C.	100	12" O.C.	48" O.C.	100	12" O.C.	48" O.C.	100	12" O.C.	48" O.C.	100	12" O.C.	48" O.C.	100	12" O.C.	48" O.C.
	30	100	15" O.C.	48" O.C.	100	15" O.C.	48" O.C.	100	15" O.C.	48" O.C.	100	15" O.C.	48" O.C.	100	15" O.C.	48" O.C.	100	15" O.C.	48" O.C.	100	15" O.C.	48" O.C.
	36	100	18" O.C.	48" O.C.	100	18" O.C.	48" O.C.	100	18" O.C.	48" O.C.	100	18" O.C.	48" O.C.	100	18" O.C.	48" O.C.	100	18" O.C.	48" O.C.	100	18" O.C.	48" O.C.
	42	100	21" O.C.	48" O.C.	100	21" O.C.	48" O.C.	100	21" O.C.	48" O.C.	100	21" O.C.	48" O.C.	100	21" O.C.	48" O.C.	100	21" O.C.	48" O.C.	100	21" O.C.	48" O.C.
	48	97	24" O.C.	48" O.C.	100	24" O.C.	48" O.C.	100	24" O.C.	48" O.C.	100	24" O.C.	48" O.C.	100	24" O.C.	48" O.C.	100	24" O.C.	48" O.C.	100	24" O.C.	48" O.C.
	54	90	27" O.C.	48" O.C.	100	27" O.C.	48" O.C.	100	27" O.C.	48" O.C.	100	27" O.C.	48" O.C.	100	27" O.C.	48" O.C.	100	27" O.C.	48" O.C.	100	27" O.C.	48" O.C.
	60	42	30" O.C.	48" O.C.	85	30" O.C.	48" O.C.	100	30" O.C.	32" O.C.	100	30" O.C.	32" O.C.	100	30" O.C.	32" O.C.	100	30" O.C.	32" O.C.	100	30" O.C.	32" O.C.
	66	40	33" O.C.	48" O.C.	81	33" O.C.	48" O.C.	100	33" O.C.	32" O.C.	100	33" O.C.	32" O.C.	100	33" O.C.	32" O.C.	100	33" O.C.	32" O.C.	100	33" O.C.	32" O.C.
	72	39	36" O.C.	48" O.C.	78	36" O.C.	48" O.C.	100	36" O.C.	32" O.C.	100	36" O.C.	32" O.C.	100	36" O.C.	32" O.C.	100	36" O.C.	32" O.C.	100	36" O.C.	32" O.C.
	78	38	39" O.C.	48" O.C.	76	39" O.C.	48" O.C.	100	39" O.C.	32" O.C.	100	39" O.C.	32" O.C.	100	39" O.C.	32" O.C.	100	39" O.C.	32" O.C.	100	39" O.C.	32" O.C.
108	24	100	12" O.C.	54" O.C.	100	12" O.C.	54" O.C.	100	12" O.C.	54" O.C.	100	12" O.C.	54" O.C.	100	12" O.C.	54" O.C.	100	12" O.C.	54" O.C.	100	12" O.C.	54" O.C.
	30	100	15" O.C.	54" O.C.	100	15" O.C.	54" O.C.	100	15" O.C.	54" O.C.	100	15" O.C.	54" O.C.	100	15" O.C.	54" O.C.	100	15" O.C.	54" O.C.	100	15" O.C.	54" O.C.
	36	100	18" O.C.	54" O.C.	100	18" O.C.	54" O.C.	100	18" O.C.	54" O.C.	100	18" O.C.	54" O.C.	100	18" O.C.	54" O.C.	100	18" O.C.	54" O.C.	100	18" O.C.	54" O.C.
	42	92	21" O.C.	54" O.C.	100	21" O.C.	54" O.C.	100	21" O.C.	54" O.C.	100	21" O.C.	54" O.C.	100	21" O.C.	54" O.C.	100	21" O.C.	54" O.C.	100	21" O.C.	54" O.C.
	48	83	24" O.C.	54" O.C.	100	24" O.C.	54" O.C.	100	24" O.C.	54" O.C.	100	24" O.C.	54" O.C.	100	24" O.C.	54" O.C.	100	24" O.C.	54" O.C.	100	24" O.C.	54" O.C.
	54	77	27" O.C.	54" O.C.	100	27" O.C.	54" O.C.	100	27" O.C.	54" O.C.	100	27" O.C.	54" O.C.	100	27" O.C.	54" O.C.	100	27" O.C.	54" O.C.	100	27" O.C.	54" O.C.
	60	36	30" O.C.	54" O.C.	72	30" O.C.	54" O.C.	100	30" O.C.	36" O.C.	100	30" O.C.	36" O.C.	100	30" O.C.	36" O.C.	100	30" O.C.	36" O.C.	100	30" O.C.	36" O.C.
	66	34	33" O.C.	54" O.C.	68	33" O.C.	54" O.C.	100	33" O.C.	36" O.C.	100	33" O.C.	36" O.C.	100	33" O.C.	36" O.C.	100	33" O.C.	36" O.C.	100	33" O.C.	36" O.C.
	72	32	36" O.C.	54" O.C.	65	36" O.C.	54" O.C.	97	36" O.C.	36" O.C.	100	36" O.C.	27" O.C.	100	36" O.C.	27" O.C.	100	36" O.C.	27" O.C.	100	36" O.C.	27" O.C.
	78	31	39" O.C.	54" O.C.	62	39" O.C.	54" O.C.	94	39" O.C.	36" O.C.	100	39" O.C.	27" O.C.	100	39" O.C.	27" O.C.	100	39" O.C.	27" O.C.	100	39" O.C.	27" O.C.
120	24	100	12" O.C.	60" O.C.	100	12" O.C.	60" O.C.	100	12" O.C.	60" O.C.	100	12" O.C.	60" O.C.	100	12" O.C.	60" O.C.	100	12" O.C.	60" O.C.	100	12" O.C.	60" O.C.
	30	100	15" O.C.	60" O.C.	100	15" O.C.	60" O.C.	100	15" O.C.	60" O.C.	100	15" O.C.	60" O.C.	100	15" O.C.	60" O.C.	100	15" O.C.	60" O.C.	100	15" O.C.	60" O.C.
	36	92	18" O.C.	60" O.C.	100	18" O.C.	60" O.C.	100	18" O.C.	60" O.C.	100	18" O.C.	60" O.C.	100	18" O.C.	60" O.C.	100	18" O.C.	60" O.C.	100	18" O.C.	60" O.C.
	42	81	21" O.C.	60" O.C.	100	21" O.C.	60" O.C.	100	21" O.C.	60" O.C.	100	21" O.C.	60" O.C.	100	21" O.C.	60" O.C.	100	21" O.C.	60" O.C.	100	21" O.C.	60" O.C.
	48	73	24" O.C.	60" O.C.	100	24" O.C.	60" O.C.	100	24" O.C.	60" O.C.	100	24" O.C.	60" O.C.	100	24" O.C.	60" O.C.	100	24" O.C.	60" O.C.	100	24" O.C.	60" O.C.
	54	67	27" O.C.	60" O.C.	100	27" O.C.	60" O.C.	100	27" O.C.	60" O.C.	100	27" O.C.	60" O.C.	100	27" O.C.	60" O.C.	100	27" O.C.	60" O.C.	100	27" O.C.	60" O.C.
	60	31	30" O.C.	60" O.C.	62	30" O.C.	60" O.C.	93	30" O.C.	40" O.C.	100	30" O.C.	30" O.C.	100	30" O.C.	30" O.C.	100	30" O.C.	30" O.C.	100	30" O.C.	30" O.C.
	66	29	33" O.C.	60" O.C.	58	33" O.C.	60" O.C.	88	33" O.C.	40" O.C.	100	33" O.C.	30" O.C.	100	33" O.C.	30" O.C.	100	33" O.C.	30" O.C.	100	33" O.C.	30" O.C.
	72	27	36" O.C.	60" O.C.	55	36" O.C.	60" O.C.	83	36" O.C.	40" O.C.	100	36" O.C.	30" O.C.	100	36" O.C.	30" O.C.	100	36" O.C.	30" O.C.	100	36" O.C.	30" O.C.
	78	26	39" O.C.	60" O.C.	53	39" O.C.	60" O.C.	80	39" O.C.	40" O.C.	100	39" O.C.	30" O.C.	100	39" O.C.	30" O.C.	100	39" O.C.	30" O.C.	100	39" O.C.	30" O.C.

FRANK BENNARDO, P.E.
PE# 0046549 CA 9885
09/01/2021

FL#29520.4

ENGINEERING EXPRESS®
POSTAL ADDRESS:
401 W. ATLANTIC AVE. R10 #219
DELRAY BEACH, FL 33444
ENGINEERINGEXPRESS.COM

CRAWFORD TRACEY CORPORATION
3301 S.W. 13th DRIVE
DEERFIELD BEACH, FL, 334422-8101
Phn. (954) 698-6888

PRO-TECH 455G ALUMINUM CURTAINWALL SYSTEM
FLORIDA STATE APPROVAL

REMARKS	DRWN	CHKD	DATE
FBC 2020 UPDATE	JEM	AJP	10/19/20

COPYRIGHT ENGINEERING EXPRESS®

20-32267

SCALE: NTS UNLESS NOTED

MAXIMUM ALLOWABLE STRESS DESIGN PRESSURE RATING FOR HEAD, SILL AND JAMB CONNECTIONS-ANCHOR TYPE C "MAX SHIM = 1/4"

FRAME HEIGHT (H)	TRIBUTARY (W)	TOTAL NUMBER OF ANCHORS AT THE CLUSTER-ANCHOR TYPE C																				
		2			4			6			8			10			12			16		
		MAX PRESSURE (PSF)	HEAD/SILL MAX ANCHOR SPACING (IN)	JAMBS MAX ANCHOR SPACING (IN)	MAX PRESSURE (PSF)	HEAD/SILL MAX ANCHOR SPACING (IN)	JAMBS MAX ANCHOR SPACING (IN)	MAX PRESSURE (PSF)	HEAD/SILL MAX ANCHOR SPACING (IN)	JAMBS MAX ANCHOR SPACING (IN)	MAX PRESSURE (PSF)	HEAD/SILL MAX ANCHOR SPACING (IN)	JAMBS MAX ANCHOR SPACING (IN)	MAX PRESSURE (PSF)	HEAD/SILL MAX ANCHOR SPACING (IN)	JAMBS MAX ANCHOR SPACING (IN)	MAX PRESSURE (PSF)	HEAD/SILL MAX ANCHOR SPACING (IN)	JAMBS MAX ANCHOR SPACING (IN)	MAX PRESSURE (PSF)	HEAD/SILL MAX ANCHOR SPACING (IN)	JAMBS MAX ANCHOR SPACING (IN)
36	24	100	12'' O.C.	18'' O.C.	100	12'' O.C.	18'' O.C.	100	12'' O.C.	18'' O.C.	100	12'' O.C.	18'' O.C.	100	12'' O.C.	18'' O.C.	100	12'' O.C.	18'' O.C.	100	12'' O.C.	18'' O.C.
	30	100	15'' O.C.	18'' O.C.	100	15'' O.C.	18'' O.C.	100	15'' O.C.	18'' O.C.	100	15'' O.C.	18'' O.C.	100	15'' O.C.	18'' O.C.	100	15'' O.C.	18'' O.C.	100	15'' O.C.	18'' O.C.
	36	100	18'' O.C.	18'' O.C.	100	18'' O.C.	18'' O.C.	100	18'' O.C.	18'' O.C.	100	18'' O.C.	18'' O.C.	100	18'' O.C.	18'' O.C.	100	18'' O.C.	18'' O.C.	100	18'' O.C.	18'' O.C.
	42	100	14'' O.C.	18'' O.C.	100	14'' O.C.	18'' O.C.	100	14'' O.C.	18'' O.C.	100	14'' O.C.	18'' O.C.	100	14'' O.C.	18'' O.C.	100	14'' O.C.	18'' O.C.	100	14'' O.C.	18'' O.C.
	48	100	16'' O.C.	18'' O.C.	100	16'' O.C.	18'' O.C.	100	16'' O.C.	18'' O.C.	100	16'' O.C.	18'' O.C.	100	16'' O.C.	18'' O.C.	100	16'' O.C.	18'' O.C.	100	16'' O.C.	18'' O.C.
	54	100	14'' O.C.	18'' O.C.	100	14'' O.C.	18'' O.C.	100	14'' O.C.	18'' O.C.	100	14'' O.C.	18'' O.C.	100	14'' O.C.	18'' O.C.	100	14'' O.C.	18'' O.C.	100	14'' O.C.	18'' O.C.
	60	60	20'' O.C.	18'' O.C.	100	15'' O.C.	18'' O.C.	100	15'' O.C.	18'' O.C.	100	15'' O.C.	18'' O.C.	100	15'' O.C.	18'' O.C.	100	15'' O.C.	18'' O.C.	100	15'' O.C.	18'' O.C.
	66	60	22'' O.C.	18'' O.C.	100	13'' O.C.	18'' O.C.	100	13'' O.C.	18'' O.C.	100	13'' O.C.	18'' O.C.	100	13'' O.C.	18'' O.C.	100	13'' O.C.	18'' O.C.	100	13'' O.C.	18'' O.C.
	72	60	24'' O.C.	18'' O.C.	100	14'' O.C.	18'' O.C.	100	14'' O.C.	18'' O.C.	100	14'' O.C.	18'' O.C.	100	14'' O.C.	18'' O.C.	100	14'' O.C.	18'' O.C.	100	14'' O.C.	18'' O.C.
	78	60	20'' O.C.	18'' O.C.	100	13'' O.C.	18'' O.C.	100	13'' O.C.	18'' O.C.	100	13'' O.C.	18'' O.C.	100	13'' O.C.	18'' O.C.	100	13'' O.C.	18'' O.C.	100	13'' O.C.	18'' O.C.
48	24	91	12'' O.C.	24'' O.C.	100	12'' O.C.	24'' O.C.	100	12'' O.C.	24'' O.C.	100	12'' O.C.	24'' O.C.	100	12'' O.C.	24'' O.C.	100	12'' O.C.	24'' O.C.	100	12'' O.C.	24'' O.C.
	30	79	15'' O.C.	24'' O.C.	100	15'' O.C.	24'' O.C.	100	15'' O.C.	24'' O.C.	100	15'' O.C.	24'' O.C.	100	15'' O.C.	24'' O.C.	100	15'' O.C.	24'' O.C.	100	15'' O.C.	24'' O.C.
	36	73	18'' O.C.	24'' O.C.	100	18'' O.C.	24'' O.C.	100	18'' O.C.	24'' O.C.	100	18'' O.C.	24'' O.C.	100	18'' O.C.	24'' O.C.	100	18'' O.C.	24'' O.C.	100	18'' O.C.	24'' O.C.
	42	69	21'' O.C.	24'' O.C.	100	14'' O.C.	24'' O.C.	100	14'' O.C.	24'' O.C.	100	14'' O.C.	24'' O.C.	100	14'' O.C.	24'' O.C.	100	14'' O.C.	24'' O.C.	100	14'' O.C.	24'' O.C.
	48	68	24'' O.C.	24'' O.C.	100	16'' O.C.	24'' O.C.	100	16'' O.C.	24'' O.C.	100	16'' O.C.	24'' O.C.	100	16'' O.C.	24'' O.C.	100	16'' O.C.	24'' O.C.	100	16'' O.C.	24'' O.C.
	54	68	18'' O.C.	24'' O.C.	100	14'' O.C.	24'' O.C.	100	14'' O.C.	24'' O.C.	100	14'' O.C.	24'' O.C.	100	14'' O.C.	24'' O.C.	100	14'' O.C.	24'' O.C.	100	14'' O.C.	24'' O.C.
	60	34	30'' O.C.	24'' O.C.	68	20'' O.C.	24'' O.C.	100	12'' O.C.	16'' O.C.	100	12'' O.C.	16'' O.C.	100	12'' O.C.	16'' O.C.	100	12'' O.C.	16'' O.C.	100	12'' O.C.	16'' O.C.
	66	34	33'' O.C.	24'' O.C.	68	17'' O.C.	24'' O.C.	100	11'' O.C.	16'' O.C.	100	11'' O.C.	16'' O.C.	100	11'' O.C.	16'' O.C.	100	11'' O.C.	16'' O.C.	100	11'' O.C.	16'' O.C.
	72	34	36'' O.C.	24'' O.C.	68	18'' O.C.	24'' O.C.	100	12'' O.C.	16'' O.C.	100	12'' O.C.	16'' O.C.	100	12'' O.C.	16'' O.C.	100	12'' O.C.	16'' O.C.	100	12'' O.C.	16'' O.C.
	78	34	26'' O.C.	24'' O.C.	68	16'' O.C.	24'' O.C.	100	11'' O.C.	16'' O.C.	100	11'' O.C.	16'' O.C.	100	11'' O.C.	16'' O.C.	100	11'' O.C.	16'' O.C.	100	11'' O.C.	16'' O.C.
60	24	68	12'' O.C.	30'' O.C.	100	12'' O.C.	30'' O.C.	100	12'' O.C.	30'' O.C.	100	12'' O.C.	30'' O.C.	100	12'' O.C.	30'' O.C.	100	12'' O.C.	30'' O.C.	100	12'' O.C.	30'' O.C.
	30	58	15'' O.C.	30'' O.C.	100	15'' O.C.	30'' O.C.	100	15'' O.C.	30'' O.C.	100	15'' O.C.	30'' O.C.	100	15'' O.C.	30'' O.C.	100	15'' O.C.	30'' O.C.	100	15'' O.C.	30'' O.C.
	36	52	18'' O.C.	30'' O.C.	100	18'' O.C.	30'' O.C.	100	18'' O.C.	30'' O.C.	100	18'' O.C.	30'' O.C.	100	18'' O.C.	30'' O.C.	100	18'' O.C.	30'' O.C.	100	18'' O.C.	30'' O.C.
	42	48	21'' O.C.	30'' O.C.	96	14'' O.C.	30'' O.C.	100	14'' O.C.	30'' O.C.	100	14'' O.C.	30'' O.C.	100	14'' O.C.	30'' O.C.	100	14'' O.C.	30'' O.C.	100	14'' O.C.	30'' O.C.
	48	45	24'' O.C.	30'' O.C.	91	16'' O.C.	30'' O.C.	100	16'' O.C.	30'' O.C.	100	16'' O.C.	30'' O.C.	100	16'' O.C.	30'' O.C.	100	16'' O.C.	30'' O.C.	100	16'' O.C.	30'' O.C.
	54	44	27'' O.C.	30'' O.C.	88	14'' O.C.	30'' O.C.	100	14'' O.C.	30'' O.C.	100	14'' O.C.	30'' O.C.	100	14'' O.C.	30'' O.C.	100	14'' O.C.	30'' O.C.	100	14'' O.C.	30'' O.C.
	60	21	30'' O.C.	30'' O.C.	43	30'' O.C.	30'' O.C.	65	20'' O.C.	20'' O.C.	87	15'' O.C.	15'' O.C.	100	12'' O.C.	12'' O.C.	100	12'' O.C.	12'' O.C.	100	12'' O.C.	12'' O.C.
	66	21	33'' O.C.	30'' O.C.	43	22'' O.C.	30'' O.C.	65	17'' O.C.	20'' O.C.	87	13'' O.C.	15'' O.C.	100	11'' O.C.	12'' O.C.	100	11'' O.C.	12'' O.C.	100	11'' O.C.	12'' O.C.
	72	21	36'' O.C.	30'' O.C.	43	24'' O.C.	30'' O.C.	65	14'' O.C.	20'' O.C.	87	12'' O.C.	15'' O.C.	100	10'' O.C.	12'' O.C.	100	10'' O.C.	12'' O.C.	100	10'' O.C.	12'' O.C.
	78	21	39'' O.C.	30'' O.C.	43	20'' O.C.	30'' O.C.	65	16'' O.C.	20'' O.C.	87	11'' O.C.	15'' O.C.	100	10'' O.C.	12'' O.C.	100	10'' O.C.	12'' O.C.	100	10'' O.C.	12'' O.C.
72	24	54	12'' O.C.	36'' O.C.	100	12'' O.C.	36'' O.C.	100	12'' O.C.	36'' O.C.	100	12'' O.C.	36'' O.C.	100	12'' O.C.	36'' O.C.	100	12'' O.C.	36'' O.C.	100	12'' O.C.	36'' O.C.
	30	46	15'' O.C.	36'' O.C.	92	15'' O.C.	36'' O.C.	100	15'' O.C.	36'' O.C.	100	15'' O.C.	36'' O.C.	100	15'' O.C.	36'' O.C.	100	15'' O.C.	36'' O.C.	100	15'' O.C.	36'' O.C.
	36	40	18'' O.C.	36'' O.C.	81	18'' O.C.	36'' O.C.	100	18'' O.C.	36'' O.C.	100	18'' O.C.	36'' O.C.	100	18'' O.C.	36'' O.C.	100	18'' O.C.	36'' O.C.	100	18'' O.C.	36'' O.C.
	42	36	21'' O.C.	36'' O.C.	73	21'' O.C.	36'' O.C.	100	14'' O.C.	36'' O.C.	100	14'' O.C.	36'' O.C.	100	14'' O.C.	36'' O.C.	100	14'' O.C.	36'' O.C.	100	14'' O.C.	36'' O.C.
	48	34	24'' O.C.	36'' O.C.	68	24'' O.C.	36'' O.C.	100	16'' O.C.	36'' O.C.	100	16'' O.C.	36'' O.C.	100	16'' O.C.	36'' O.C.	100	16'' O.C.	36'' O.C.	100	16'' O.C.	36'' O.C.
	54	32	27'' O.C.	36'' O.C.	64	18'' O.C.	36'' O.C.	97	14'' O.C.	36'' O.C.	100	14'' O.C.	36'' O.C.	100	14'' O.C.	36'' O.C.	100	14'' O.C.	36'' O.C.	100	14'' O.C.	36'' O.C.
	60	15	30'' O.C.	36'' O.C.	31	30'' O.C.	36'' O.C.	46	20'' O.C.	24'' O.C.	62	20'' O.C.	18'' O.C.	78	15'' O.C.	14'' O.C.	93	12'' O.C.	12'' O.C.	100	12'' O.C.	10'' O.C.
	66	15	33'' O.C.	36'' O.C.	30	33'' O.C.	36'' O.C.	45	22'' O.C.	24'' O.C.	61	17'' O.C.	18'' O.C.	76	13'' O.C.	14'' O.C.	91	11'' O.C.	12'' O.C.	100	11'' O.C.	10'' O.C.
	72	15	36'' O.C.	36'' O.C.	30	36'' O.C.	36'' O.C.	45	24'' O.C.	24'' O.C.	60	18'' O.C.	18'' O.C.	76	14'' O.C.	14'' O.C.	91	12'' O.C.	12'' O.C.	100	10'' O.C.	10'' O.C.
	78	15	39'' O.C.	36'' O.C.	30	26'' O.C.	36'' O.C.	45	20'' O.C.	24'' O.C.	60	16'' O.C.	18'' O.C.	76	13'' O.C.	14'' O.C.	91	11'' O.C.	12'' O.C.	100	10'' O.C.	10'' O.C.

FRANK BENNARDO, P.E.
PE# 0046549 CA 9885
09/01/2021

FL#29520.4

ENGINEERING EXPRESS®
POSTAL ADDRESS:
401 W. ATLANTIC AVE. R10 #219
DELRAY BEACH, FL 33444
ENGINEERINGEXPRESS.COM

CRAWFORD TRACEY CORPORATION
3301 S.W. 13th DRIVE
DEERFIELD BEACH, FL, 334422-8101
Phn. (954) 698-6888

PRO-TECH 45SG ALUMINUM CURTAINWALL SYSTEM
FLORIDA STATE APPROVAL

REMARKS	DRWN	CHKD	DATE
FBC 2020 UPDATE	JEM	AJP	10/19/20

COPYRIGHT ENGINEERING EXPRESS®

20-32267

SCALE: NTS UNLESS NOTED

MAXIMUM ALLOWABLE STRESS DESIGN PRESSURE RATING FOR HEAD, SILL AND JAMB CONNECTIONS-ANCHOR TYPE C "MAX SHIM = 1/4"

FRAME HEIGHT (H)	TRIBUTARY (W)	TOTAL NUMBER OF ANCHORS AT THE CLUSTER-ANCHOR TYPE C																				
		2			4			6			8			10			12			16		
		MAX PRESSURE (PSF)	HEAD/SILL MAX ANCHOR SPACING (IN)	JAMBS MAX ANCHOR SPACING (IN)	MAX PRESSURE (PSF)	HEAD/SILL MAX ANCHOR SPACING (IN)	JAMBS MAX ANCHOR SPACING (IN)	MAX PRESSURE (PSF)	HEAD/SILL MAX ANCHOR SPACING (IN)	JAMBS MAX ANCHOR SPACING (IN)	MAX PRESSURE (PSF)	HEAD/SILL MAX ANCHOR SPACING (IN)	JAMBS MAX ANCHOR SPACING (IN)	MAX PRESSURE (PSF)	HEAD/SILL MAX ANCHOR SPACING (IN)	JAMBS MAX ANCHOR SPACING (IN)	MAX PRESSURE (PSF)	HEAD/SILL MAX ANCHOR SPACING (IN)	JAMBS MAX ANCHOR SPACING (IN)	MAX PRESSURE (PSF)	HEAD/SILL MAX ANCHOR SPACING (IN)	JAMBS MAX ANCHOR SPACING (IN)
84	24	45	12'' O.C.	42'' O.C.	91	12'' O.C.	42'' O.C.	100	12'' O.C.	42'' O.C.	100	12'' O.C.	42'' O.C.	100	12'' O.C.	42'' O.C.	100	12'' O.C.	42'' O.C.	100	12'' O.C.	42'' O.C.
	30	38	15'' O.C.	42'' O.C.	76	15'' O.C.	42'' O.C.	100	15'' O.C.	42'' O.C.	100	15'' O.C.	42'' O.C.	100	15'' O.C.	42'' O.C.	100	15'' O.C.	42'' O.C.	100	15'' O.C.	42'' O.C.
	36	33	18'' O.C.	42'' O.C.	66	18'' O.C.	42'' O.C.	99	18'' O.C.	42'' O.C.	100	18'' O.C.	42'' O.C.	100	18'' O.C.	42'' O.C.	100	18'' O.C.	42'' O.C.	100	18'' O.C.	42'' O.C.
	42	29	21'' O.C.	42'' O.C.	59	21'' O.C.	42'' O.C.	89	21'' O.C.	42'' O.C.	100	14'' O.C.	42'' O.C.	100	14'' O.C.	42'' O.C.	100	14'' O.C.	42'' O.C.	100	14'' O.C.	42'' O.C.
	48	27	24'' O.C.	42'' O.C.	54	24'' O.C.	42'' O.C.	82	16'' O.C.	42'' O.C.	100	16'' O.C.	42'' O.C.	100	16'' O.C.	42'' O.C.	100	16'' O.C.	42'' O.C.	100	16'' O.C.	42'' O.C.
	54	25	27'' O.C.	42'' O.C.	51	27'' O.C.	42'' O.C.	76	18'' O.C.	42'' O.C.	100	14'' O.C.	42'' O.C.	100	14'' O.C.	42'' O.C.	100	14'' O.C.	42'' O.C.	100	14'' O.C.	42'' O.C.
	60	12	30'' O.C.	42'' O.C.	24	30'' O.C.	42'' O.C.	36	30'' O.C.	28'' O.C.	48	20'' O.C.	21'' O.C.	60	20'' O.C.	17'' O.C.	73	15'' O.C.	14'' O.C.	97	12'' O.C.	11'' O.C.
	66	11	33'' O.C.	42'' O.C.	23	33'' O.C.	42'' O.C.	35	33'' O.C.	28'' O.C.	46	22'' O.C.	21'' O.C.	58	17'' O.C.	17'' O.C.	70	17'' O.C.	14'' O.C.	93	11'' O.C.	11'' O.C.
	72	11	36'' O.C.	42'' O.C.	22	36'' O.C.	42'' O.C.	34	24'' O.C.	28'' O.C.	45	24'' O.C.	21'' O.C.	57	18'' O.C.	17'' O.C.	68	14'' O.C.	14'' O.C.	91	12'' O.C.	11'' O.C.
	78	11	39'' O.C.	42'' O.C.	22	39'' O.C.	42'' O.C.	33	26'' O.C.	28'' O.C.	44	20'' O.C.	21'' O.C.	56	16'' O.C.	17'' O.C.	67	13'' O.C.	14'' O.C.	89	11'' O.C.	11'' O.C.
96	24	39	12'' O.C.	48'' O.C.	78	12'' O.C.	48'' O.C.	100	12'' O.C.	48'' O.C.	100	12'' O.C.	48'' O.C.	100	12'' O.C.	48'' O.C.	100	12'' O.C.	48'' O.C.	100	12'' O.C.	48'' O.C.
	30	32	15'' O.C.	48'' O.C.	64	15'' O.C.	48'' O.C.	97	15'' O.C.	48'' O.C.	100	15'' O.C.	48'' O.C.	100	15'' O.C.	48'' O.C.	100	15'' O.C.	48'' O.C.	100	15'' O.C.	48'' O.C.
	36	28	18'' O.C.	48'' O.C.	56	18'' O.C.	48'' O.C.	84	18'' O.C.	48'' O.C.	100	18'' O.C.	48'' O.C.	100	18'' O.C.	48'' O.C.	100	18'' O.C.	48'' O.C.	100	18'' O.C.	48'' O.C.
	42	25	21'' O.C.	48'' O.C.	50	21'' O.C.	48'' O.C.	75	21'' O.C.	48'' O.C.	100	14'' O.C.	48'' O.C.	100	14'' O.C.	48'' O.C.	100	14'' O.C.	48'' O.C.	100	14'' O.C.	48'' O.C.
	48	22	24'' O.C.	48'' O.C.	45	24'' O.C.	48'' O.C.	68	24'' O.C.	48'' O.C.	91	16'' O.C.	48'' O.C.	100	16'' O.C.	32'' O.C.	100	16'' O.C.	32'' O.C.	100	16'' O.C.	32'' O.C.
	54	21	27'' O.C.	48'' O.C.	42	27'' O.C.	48'' O.C.	63	18'' O.C.	48'' O.C.	84	14'' O.C.	48'' O.C.	100	14'' O.C.	32'' O.C.	100	14'' O.C.	32'' O.C.	100	14'' O.C.	32'' O.C.
	60	9	30'' O.C.	48'' O.C.	19	30'' O.C.	48'' O.C.	29	30'' O.C.	32'' O.C.	39	30'' O.C.	24'' O.C.	49	20'' O.C.	19'' O.C.	59	20'' O.C.	16'' O.C.	79	15'' O.C.	12'' O.C.
	66	9	33'' O.C.	48'' O.C.	18	33'' O.C.	48'' O.C.	28	33'' O.C.	32'' O.C.	37	22'' O.C.	24'' O.C.	47	22'' O.C.	19'' O.C.	56	17'' O.C.	16'' O.C.	75	13'' O.C.	12'' O.C.
	72	9	36'' O.C.	48'' O.C.	18	36'' O.C.	48'' O.C.	27	36'' O.C.	32'' O.C.	36	24'' O.C.	24'' O.C.	45	24'' O.C.	19'' O.C.	54	18'' O.C.	16'' O.C.	73	14'' O.C.	12'' O.C.
	78	8	39'' O.C.	48'' O.C.	17	39'' O.C.	48'' O.C.	26	26'' O.C.	32'' O.C.	35	26'' O.C.	24'' O.C.	44	20'' O.C.	19'' O.C.	53	16'' O.C.	16'' O.C.	70	13'' O.C.	12'' O.C.
108	24	34	12'' O.C.	54'' O.C.	68	12'' O.C.	54'' O.C.	100	12'' O.C.	54'' O.C.	100	12'' O.C.	54'' O.C.	100	12'' O.C.	54'' O.C.	100	12'' O.C.	54'' O.C.	100	12'' O.C.	54'' O.C.
	30	28	15'' O.C.	54'' O.C.	56	15'' O.C.	54'' O.C.	84	15'' O.C.	54'' O.C.	100	15'' O.C.	54'' O.C.	100	15'' O.C.	54'' O.C.	100	15'' O.C.	54'' O.C.	100	15'' O.C.	54'' O.C.
	36	24	18'' O.C.	54'' O.C.	48	18'' O.C.	54'' O.C.	73	18'' O.C.	54'' O.C.	97	18'' O.C.	54'' O.C.	100	18'' O.C.	36'' O.C.	100	18'' O.C.	36'' O.C.	100	18'' O.C.	36'' O.C.
	42	21	21'' O.C.	54'' O.C.	43	21'' O.C.	54'' O.C.	64	21'' O.C.	54'' O.C.	86	21'' O.C.	54'' O.C.	100	14'' O.C.	36'' O.C.	100	14'' O.C.	36'' O.C.	100	14'' O.C.	36'' O.C.
	48	19	24'' O.C.	54'' O.C.	39	24'' O.C.	54'' O.C.	58	24'' O.C.	54'' O.C.	78	16'' O.C.	54'' O.C.	97	16'' O.C.	36'' O.C.	100	16'' O.C.	36'' O.C.	100	16'' O.C.	36'' O.C.
	54	18	27'' O.C.	54'' O.C.	36	27'' O.C.	54'' O.C.	54	27'' O.C.	54'' O.C.	72	18'' O.C.	54'' O.C.	90	14'' O.C.	36'' O.C.	100	14'' O.C.	36'' O.C.	100	14'' O.C.	36'' O.C.
	60	8	30'' O.C.	54'' O.C.	16	30'' O.C.	54'' O.C.	25	30'' O.C.	36" O.C.	33	30'' O.C.	27'' O.C.	42	30'' O.C.	22'' O.C.	50	20'' O.C.	18'' O.C.	67	15'' O.C.	14'' O.C.
	66	7	33'' O.C.	54'' O.C.	15	33'' O.C.	54'' O.C.	23	33'' O.C.	36" O.C.	31	33'' O.C.	27'' O.C.	39	22'' O.C.	22'' O.C.	47	22'' O.C.	18'' O.C.	63	17'' O.C.	14'' O.C.
	72	7	36'' O.C.	54'' O.C.	15	36'' O.C.	54'' O.C.	22	36'' O.C.	36" O.C.	30	36'' O.C.	27'' O.C.	38	24'' O.C.	22'' O.C.	45	24'' O.C.	18'' O.C.	60	18'' O.C.	14'' O.C.
	78	7	39'' O.C.	54'' O.C.	14	39'' O.C.	54'' O.C.	21	39'' O.C.	36" O.C.	29	26'' O.C.	27'' O.C.	36	26'' O.C.	22'' O.C.	43	20'' O.C.	18'' O.C.	58	16'' O.C.	14'' O.C.
120	24	30	12'' O.C.	60'' O.C.	60	12'' O.C.	60'' O.C.	91	12'' O.C.	60'' O.C.	100	12'' O.C.	60'' O.C.	100	12'' O.C.	60'' O.C.	100	12'' O.C.	60'' O.C.	100	12'' O.C.	60'' O.C.
	30	25	15'' O.C.	60'' O.C.	50	15'' O.C.	60'' O.C.	75	15'' O.C.	60'' O.C.	100	15'' O.C.	60'' O.C.	100	15'' O.C.	60'' O.C.	100	15'' O.C.	60'' O.C.	100	15'' O.C.	60'' O.C.
	36	21	18'' O.C.	60'' O.C.	42	18'' O.C.	60'' O.C.	64	18'' O.C.	60'' O.C.	85	18'' O.C.	60'' O.C.	100	18'' O.C.	40'' O.C.	100	18'' O.C.	40'' O.C.	100	18'' O.C.	40'' O.C.
	42	18	21'' O.C.	60'' O.C.	37	21'' O.C.	60'' O.C.	56	21'' O.C.	60'' O.C.	75	21'' O.C.	60'' O.C.	94	14'' O.C.	40'' O.C.	100	14'' O.C.	40'' O.C.	100	14'' O.C.	40'' O.C.
	48	17	24'' O.C.	60'' O.C.	34	24'' O.C.	60'' O.C.	51	24'' O.C.	60'' O.C.	68	24'' O.C.	60'' O.C.	85	16'' O.C.	40'' O.C.	100	16'' O.C.	40'' O.C.	100	16'' O.C.	40'' O.C.
	54	15	27'' O.C.	60'' O.C.	31	27'' O.C.	60'' O.C.	47	27'' O.C.	60'' O.C.	62	18'' O.C.	60'' O.C.	78	18'' O.C.	40'' O.C.	94	14'' O.C.	40'' O.C.	100	14'' O.C.	30'' O.C.
	60	7	30'' O.C.	60'' O.C.	14	30'' O.C.	60'' O.C.	21	30'' O.C.	40'' O.C.	29	30'' O.C.	30'' O.C.	36	30'' O.C.	24'' O.C.	43	30'' O.C.	20'' O.C.	58	20'' O.C.	15'' O.C.
	66	6	33'' O.C.	60'' O.C.	13	33'' O.C.	60'' O.C.	20	33'' O.C.	40'' O.C.	27	33'' O.C.	30'' O.C.	34	33'' O.C.	24'' O.C.	41	22'' O.C.	20'' O.C.	54	22'' O.C.	15'' O.C.
	72	6	36'' O.C.	60'' O.C.	13	36'' O.C.	60'' O.C.	19	36'' O.C.	40'' O.C.	26	36'' O.C.	30'' O.C.	32	24'' O.C.	24'' O.C.	39	24'' O.C.	20'' O.C.	52	18'' O.C.	15'' O.C.
	78	6	39'' O.C.	60'' O.C.	12	39'' O.C.	60'' O.C.	18	39'' O.C.	40'' O.C.	24	39'' O.C.	30'' O.C.	31	26'' O.C.	24'' O.C.	37	26'' O.C.	20'' O.C.	49	20'' O.C.	15'' O.C.

FRANK BENNARDO, P.E.
PE# 0046549 CA 9885

09/01/2021

FL#29520.4

ENGINEERING EXPRESS®
POSTAL ADDRESS:
401 W. ATLANTIC AVE. R10 #219
DELRAY BEACH, FL 33444
ENGINEERINGEXPRESS.COM

CRAWFORD TRACEY CORPORATION
3301 S.W. 13th DRIVE
DEERFIELD BEACH, FL, 334422-8101
Phn. (954) 698-6888

PRO-TECH 45SG ALUMINUM CURTAINWALL SYSTEM
FLORIDA STATE APPROVAL

REMARKS	DRWN	CHKD	DATE
FBC 2020 UPDATE	JEM	AJP	10/19/20
-	-	-	-
-	-	-	-
-	-	-	-
-	-	-	-

COPYRIGHT ENGINEERING EXPRESS®

20-32267

SCALE: NTS UNLESS NOTED

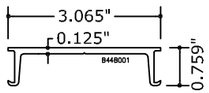

1 SUB-BUCK

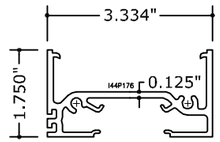

2 FRAME HEAD/SILL

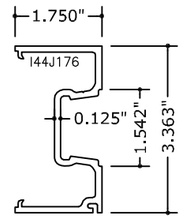

5 FRAME JAMB

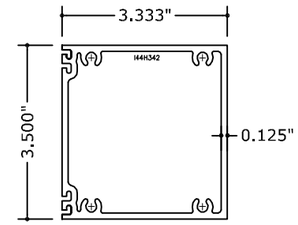

6 HORIZONTAL INTERMEDIATE

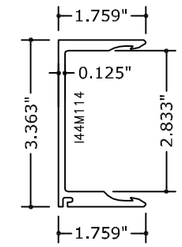

7 FEMALE JAMB / MULLION

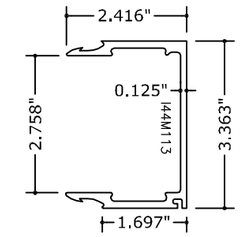

8 MALE JAMB / MULLION

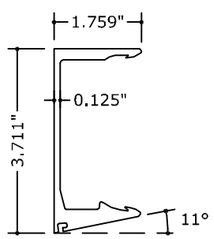

7A FEMALE JAMB / MULLION

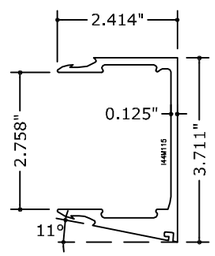

8A MALE JAMB / MULLION

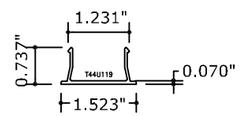

9 SNAP IN COVER

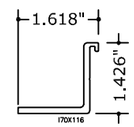

10 SETTING CHAIR

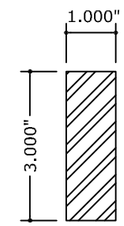

14 STEEL REINFORCEMENT BAR (FULL LENGTH)

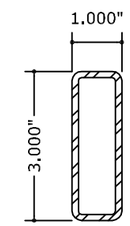

15 STEEL REINFORCEMENT TUBE (FULL LENGTH)

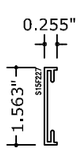

20 APPLIED TRIM CAP

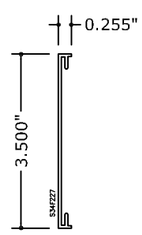

21 APPLIED TRIM CAP

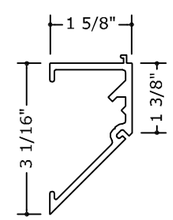

24 270° CORNER ADAPTOR

FRANK BENNARDO, P.E.
PE# 0046549 CA 9885

09/01/2021

FL#29520.4

ENGINEERING EXPRESS®
POSTAL ADDRESS:
401 W. ATLANTIC AVE. R10 #219
DELRAY BEACH, FL 33444
ENGINEERINGEXPRESS.COM

CRAWFORD TRACEY CORPORATION
3301 S.W. 13th DRIVE
DEERFIELD BEACH, FL, 334422-8101
Phn. (954) 698-6888

PRO-TECH 45SG ALUMINUM CURTAINWALL SYSTEM
FLORIDA STATE APPROVAL

REMARKS	DRWN	CHKD	DATE
FBC 2020 UPDATE	JEM	AJP	10/19/20
-	-	-	-
-	-	-	-
-	-	-	-
-	-	-	-

COPYRIGHT ENGINEERING EXPRESS®

20-32267

SCALE: NTS UNLESS NOTED

BILL OF MATERIALS

ITEM NO.	PART NUMBER	QUANTITY	DESCRIPTION	MATERIAL	MANF. / SUPPLIER / REMARKS
1	B44B001	AS REQD.	SUB-BUCK	6005A-T61	------
2	I44P176	AS REQD.	FRAME HEAD / SILL	6063-T6	------
5	I44J176	AS REQD.	FRAME JAMB	6063-T6	------
6	I44H342	AS REQD.	HORIZONTAL	6063-T6	------
7	I44M114	AS REQD.	FEMALE MULLION	6063-T6	------
7A	I44M116	AS REQD.	ALT. FEMALE MULLION	6063-T6	------
8	I44M113	AS REQD.	MALE MULLION	6063-T6	------
8A	I44M115	AS REQD.	ALT. MALE MULLION	6063-T6	------
9	T44U119	AS REQD.	SNAP-IN COVER	6063-T6	------
10	170X116	AS REQD.	4" LONG SETTING CHAIR (INSUL. LAM. GLASS)	6005A-T61	AT 1/4 POINTS
11	#2	AS REQD.	INTERIOR GLAZING GASKET	POLYPROPYLENE	------
13	DOWSIL 983	–	GLAZING COMPOUND	SILICONE	------
14	–	AS REQD.	STEEL BAR, FULL LENGTH	STEEL	1"x 3"
15	–	AS REQD.	REINFORCING TUBE, FULL LENGTH	STEEL	1"x 3"x 11 GA.
16	#14 X 1 1/4"	AS REQD.	FRAME ASSEMBLY SCREWS	ST. STEEL	P.H. SMS
17	–	AS REQD.	FILLER CHANNEL	ALUMINUM	13/16"x 1 1/2"x 13/16"X 1/8"
18	–	AS REQD.	FILLER CHANNEL	ALUMINUM	11/16"x 1 1/4"x 11/16"X 1/8"
19	#10 X 1"	AS REQD.	FILLER CHANNEL SCREWS	ST. STEEL	AT 14" O.C.
20	S15F227	AS REQD.	APPLIED TRIM CAP (OPTIONAL)	6063-T5	------
21	S34F227	AS REQD.	APPLIED TRIM CAP (OPTIONAL)	6063-T6	------
22	–	AS REQD.	DOUBLE SIDED GLAZING TAPE	FOAM	------
23	–	AS REQD.	SETTING BLOCK AT 1/4 POINTS (1/16" OR 1/8" X 4")	SILICONE	DUROMETER 80 ± 5 SHORE A
24	I45C270	AS REQD.	270° CORNER ADAPTOR	6063-T6	------

FRANK BENNARDO, P.E.
PE# 0046549 CA 9885

FRANK L. BENNARDO LICENSE NO. PE0046549 STATE OF FLORIDA PROFESSIONAL ENGINEER

09/01/2021

FL#29520.4

ENGINEERING EXPRESS®
POSTAL ADDRESS:
401 W. ATLANTIC AVE. R10 #219
DELRAY BEACH, FL 33444
ENGINEERINGEXPRESS.COM

CRAWFORD TRACEY CORPORATION
3301 S.W. 13th DRIVE
DEERFIELD BEACH, FL, 334422-8101
Phn. (954) 698-6888

PRO-TECH 45SG ALUMINUM CURTAINWALL SYSTEM
FLORIDA STATE APPROVAL

REMARKS	DRWN	CHKD	DATE
FBC 2020 UPDATE	JEM	AJP	10/19/20
-	-	-	-
-	-	-	-
-	-	-	-
-	-	-	-

COPYRIGHT ENGINEERING EXPRESS®

20-32267

SCALE: NTS UNLESS NOTED

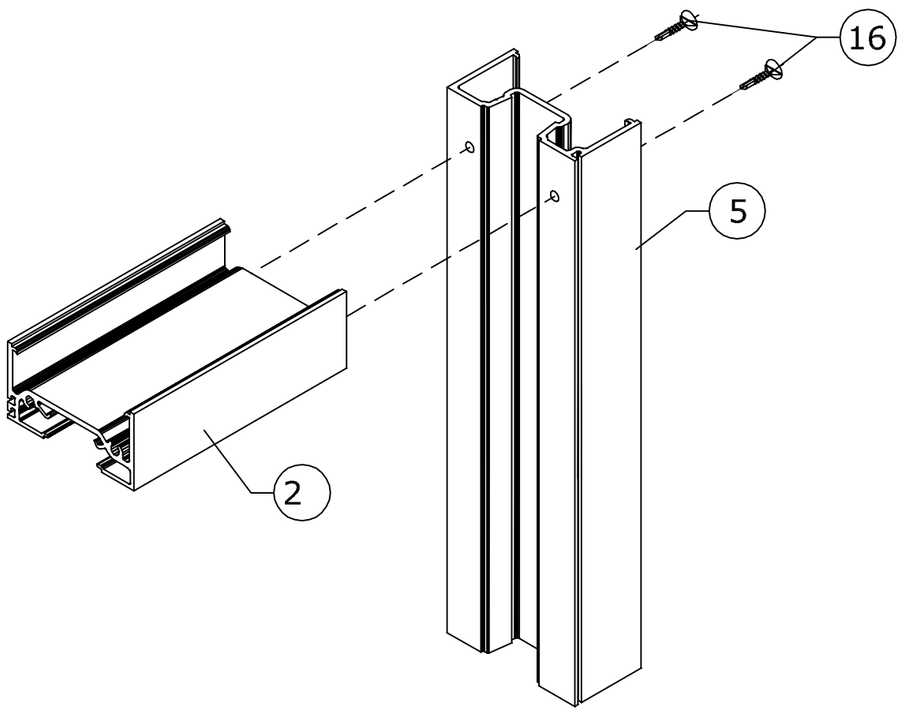

FRAME TOP/BOTTOM CORNERS

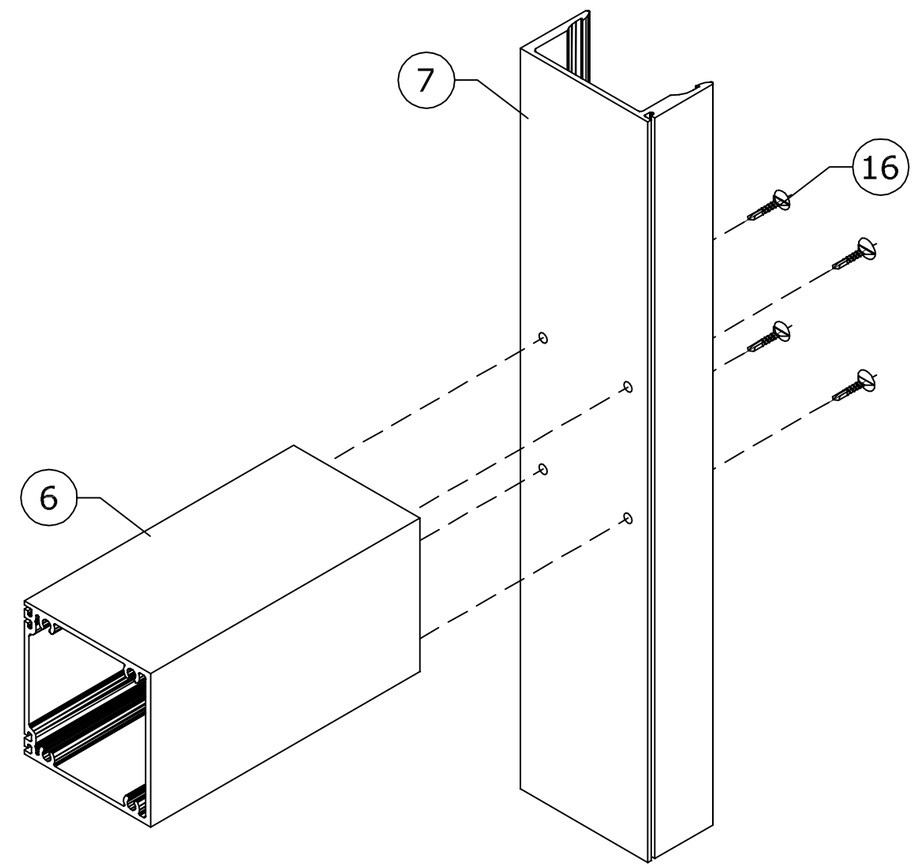

FRAME HORIZONTAL CORNER

FRANK BENNARDO, P.E.
PE# 0046549 CA 9885

09/01/2021

FL#29520.4

ENGINEERING EXPRESS®
POSTAL ADDRESS:
401 W. ATLANTIC AVE. R10 #219
DELRAY BEACH, FL 33444
ENGINEERINGEXPRESS.COM

CRAWFORD TRACEY CORPORATION
3301 S.W. 13th DRIVE
DEERFIELD BEACH, FL, 334422-8101
Phn. (954) 698-6888

PRO-TECH 45SG ALUMINUM CURTAINWALL SYSTEM
FLORIDA STATE APPROVAL

REMARKS	DRWN	CHKD	DATE
FBC 2020 UPDATE	JEM	AJP	10/19/20
-	-	-	-
-	-	-	-
-	-	-	-
-	-	-	-

COPYRIGHT ENGINEERING EXPRESS®

20-32267

SCALE: NTS UNLESS NOTED